AKAI
SERVICE MANUAL

Model:
LCT3201TD

Safety Instructions.....1~2
Production specification.....3~11
DVD Player's Spec. for LCD Comb.....12
LCD COMBO Connection.....13
Panel Inverter Power.....14~29
Basic Operations & Circuit Description..... ..30
PCB Function..... .. 31
PCB Failure Analysis..... 32
Basic Operation of LCD-TV.....33~34
IC Descriptions..... .35~45
LCD Panel specification..... 46~101
Exploded View Diagram..... 102
Spare parts list.....103~104
V-Chip Password..... 105
Software Upgrade.....105~106

This manual is the latest at the time of printing, and does not include the modification which may be made after the printing, by the constant improvement of product.

I. Safety Instructions

CAUTION

RISK OF ELECTRIC SHOCK DO NOT OPEN

CAUTION: TO REDUCE THE RISK OF ELECTRIC SHOCK, DO NOT REMOVE COVER (OR BACK). NO USER-SERVICEABLE PARTS INSIDE. REFER SERVICING TO QUALIFIED SERVICE PERSONNEL ONLY.

The lightning flash with arrowhead symbol, within an equilateral triangle, is intended to alert the user to the presence of uninsulated " dangerous voltage" within the product' s enclosure that may be of sufficient magnitude to constitute a risk of electric shock to persons.

The exclamation point within an equilateral triangle is intended to alert the user to the presence of important operating and maintenance (servicing) instructions in the literature accompanying the appliance.

PRECAUTIONS DURING SERVICING

1. In addition to safety, other parts and assemblies are specified for conformance with such regulations as those applying to spurious radiation. These must also be replaced only with specified replacements. Examples: RF converters, tuner units, antenna selection switches, RF cables, noise-blocking capacitors, noise-blocking filters, etc.
2. Use specified internal Wiring. Note especially:
   1) Wires covered with PVC tubing
   2) Double insulated wires
   3) High voltage leads
3. Use specified insulating materials for hazardous live parts. Note especially:
   1) Insulating Tape
   2) PVC tubing
   3) Spacers (insulating barriers)
   4) Insulating sheets for transistors
   5) Plastic screws for fixing micro switches
4. When replacing AC primary side components (transformers, power cords, noise blocking capacitors, etc.), wrap ends of wires securely about the terminals before soldering.

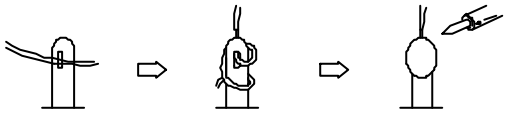

5. Make sure that wires do not contact heat generating parts (heat sinks, oxide metal film resistors, fusible resistors, etc.)
6. Check if replaced wires do not contact sharply edged or pointed parts.
7. Make sure that foreign objects (screws, solder droplets, etc.) do not remain inside the set.

MAKE YOUR CONTRIBUTION TO PROTECT THE ENVIRONMENT

Used batteries with the ISO symbol for recycling as well as small accumulators (rechargeable batteries), mini-batteries (cells) and starter batteries should not be thrown into the garbage can.

Please leave them at an appropriate depot.

WARNING:

Before servicing this TV receiver, read the X-RAY RADIATION PRECAUTION, SAFETY INSTRUCTION and PRODUCT SAFETY NOTICE.

X-RAY RADIATION PRECAUTION

1. Excessively high can produce potentially hazardous X-RAY RADIATION. To avoid such hazards, the high voltage must not exceed the specified limit. The normal value of the high voltage of this TV receiver is 27 KV at zero bean current (minimum brightness). The high voltage must not exceed 30 KV under any circumstances. Each time when a receiver requires servicing, the high voltage should be checked. The reading of the high voltage is recommended to be recorded as a part of the service record, It is important to use an accurate and reliable high voltage meter.
2. The only source of X-RAY RADIATION in this TV receiver is the picture tube. For continued X-RAY RADIATION protection, the replacement tube must be exactly the same type as specified in the parts list.
3. Some parts in this TV receiver have special safety related characteristics for X-RADIATION protection. For continued safety, the parts replacement should be under taken only after referring the PRODUCT SAFETY NOTICE.

SAFETY INSTRUCTION

The service should not be attempted by anyone unfamiliar with the necessary instructions on this TV receiver. The following are the necessary instructions to be observed before servicing.

1. An isolation transformer should be connected in the power line between the receiver and the AC line when a service is performed on the primary of the converter transformer of the set.
2. Comply with all caution and safety related provided on the back of the cabinet, inside the cabinet, on the chassis or picture tube.
3. To avoid a shock hazard, always discharge the picture tube's anode to the chassis ground before removing the anode cap.

4. Completely discharge the high potential voltage of the picture tube before handling. The picture tube is a vacuum and if broken, the glass will explode.
5. When replacing a MAIN PCB in the cabinet, always be certain that all protective are installed properly such as control knobs, adjustment covers or shields, barriers, isolation resistor networks etc.
6. When servicing is required, observe the original lead dressing. Extra precaution should be given to assure correct lead dressing in the high voltage area.
7. Keep wires away from high voltage or high tempera ture components.
8. Before returning the set to the customer, always perform an AC leakage current check on the exposed metallic parts of the cabinet, such as antennas, terminals, screwheads, metal overlay, control shafts, etc., to be sure the set is safe to operate without danger of electrical shock. Plug the AC line cord directly to the AC outlet (do not use a line isolation transformer during this check). Use an AC voltmeter having 5K ohms volt sensitivity or more in the following manner.
   Connect a 1.5K ohm 10 watt resistor paralleled by a 0.15µF AC type capacitor, between a good earth ground (water pipe, conductor etc.,) and the exposed metallic parts, one at a time.
   Measure the AC voltage across the combination of the 1.5K ohm resistor and 0.15 uF capacitor. Reverse the AC plug at the AC outlet and repeat the AC voltage measurements for each exposed metallic part.
   The measured voltage must not exceed 0.3V RMS. This corresponds to 0.5mA AC. Any value exceeding this limit constitutes a potential shock hazard and must be corrected immediately.
   The resistance measurement should be done between accessible exposed metal parts and power cord plug prongs with the power switch "ON". The resistance should be more than 6M ohms.

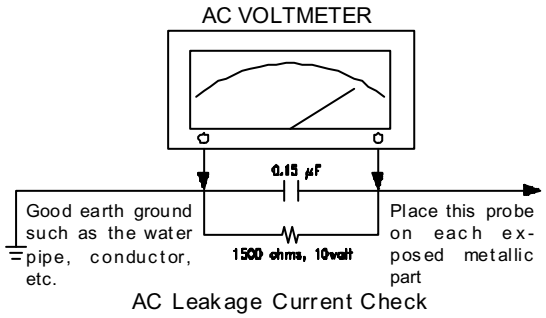

AC Leakage Current Check

PRODUCT SAFETY NOTICE

Many electrical and mechanical parts in this TV receiver have special safety-related characteristics. These characteristics are offer passed unnoticed by visual spection and the protection afforded by them cannot necessarily be obtained by using replacement components rates for a higher voltage, wattage, etc. The replacement parts which have these special safety characteristics are identified by ⚠ marks on the schematic diagram and on the parts list. Before replacing any of these components, read the parts list in this manual carefully. The use of substitute replacement parts which do not have the same safety characteristics as specified in the parts list may create shock, fire, X-RAY RADIATION or other hazards.

Reference No : LCT3201TD

Product Specification

1.1 VIDEO SECTION	**CHIMEI V320B1-L01** **MK8205** **USA**
Display size	**32"/16:9**
Display Resolution	**1366 X 768**
Pixel Pitch	**0.17025mm×0.51075mm**
Peak Brightness	**550(nits)**
Contract Ratio	**1000:1, Typical (1/100 White Window, Dark Room)**
View Angle	**Hor. And Vert. ≥170 degree**
Color Deeps	**16.7M Color (R / G/ B each 256 Scales)**
PC Resolution Supporting	**VGA, SVGA, XGA,WXGA**
HDTV Compatible	**480p / 720p / 1080i**
Progressive Scanning	**Yes**
Film Mode Pull Down	**Yes**
"GAMMA" Correction	**Yes**
Color Temperature Control	**Yes**
Comb Filter	**Yes**
Second De-interlace for Sub picture	**No**
Wide Mode	**Normal, Full, Wide 1, Wide 2, Wide 3, 4:3, No scale and Panoramic.**
TV System	**NTSC M**
Dual Tuner System	**No**
AV Input Color System	**PAL /NTSC**
PIP	**Basic mode (video on graphic mode,resolution≥1024×768)**
1.2 AUDIO SECTION	
Audio Output Power	**6W×2 Max.(8 ohm)**
Sound Effect	**Spatial Effect and Surround**
Tone Control	**Yes**
1.3 Input Terminals	**D-Sub 15 Pin Type(Analog-RGB Input) ×1** **D-Sub 9 Pin (RS-232)** **RF (F-type Input) ×1** **Component Video-YPbPr ×1 RCA Terminals** **S-Video Input (Mini Din 4Pin) ×1** **Video Input RCA Terminals** **Stereo Audio Input for YPbPr x 1** **(3.5mm Phone Type) x 1**
1.4 Output Terminals	**Audio Output (RCA ; L&R Type) ×1**
1.5 Others	
Closed Caption / V-Chip	**Yes**
Teletext	**No**
OSD Language	**English, Français, Español**

Reference No : LCT3201TD

Stereo Decode	**MTS with SAP**
Power Rating	**AC 100-240V, 50/60Hz**
Power Consumption	**220W**

1.6 Support the Signal Mode
This machine can support the different from VGA signal mode in 7 kinds

Resolution	Horizontal Frequency (kHz)	Vertical Frequency (Hz)
640 x 480	31.50	60.00
	37.86	72.81
800 x 600	35.16	56.25
	37.90	60.32
	46.90	75.00
	48.08	72.19
1024 x 768	48.40	60.00

1.7 HDTV Mode (YPbPr)

Resolution	Horizontal Frequency (KHz)	Vertical Frequency (Hz)
480i	15.734	59.94
480p(720x480)	31.468	59.94
720p(1280x720)	45.00	60.00
1080i(1920x1080)	33.75	60.00

1.8 Remote Control

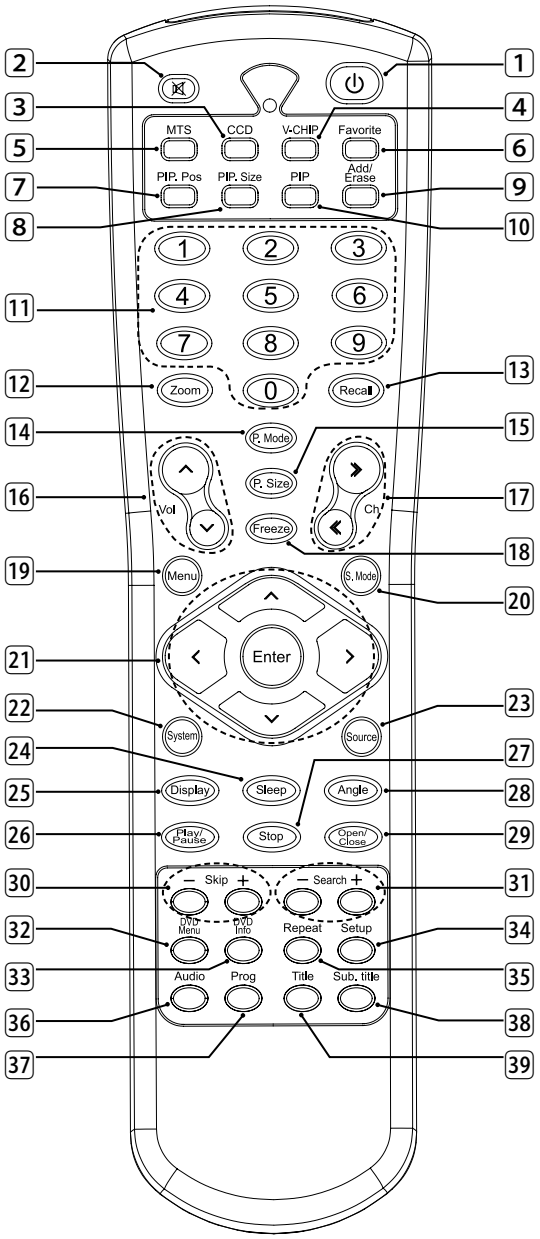

1. **Power (⏻)**: Press to turn on and off.
2. **Mute (🔇)**: Press to mute the sound. Press again or press < , > to restore the sound.
3. **CCD**: Press to select the Closed Caption mode.
4. **V-CHIP**: Press to select the child protect mode.
5. **MTS**: Press repeatedly to cycle through the Multi-channel TV sound (MTS) options: Mono, Stereo and SAP (Second Audio Program).
6. **Favorite**: Press repeatedly to cycle through the favorite channel list.
7. **PIP. Pos**: Press to change the PIP window position under PIP mode.
8. **PIP. Size**: Press to cycle through the PIP size, such as Large, Medium, Small.
9. **Add/Erase**: Press to add or delete favorite channel.
10. **PIP**: Press to cycles through the different POP or PIP modes, such as Basic PIP, LR POP, and exit.
11. **0~9 Number Buttons**: In TV mode, press 0~9 to select a channel; the channel changes after 2 seconds.
    In DVD mode, press 0~9 to input the items.
12. **Zoom**: Press to zoom the image max from 8 times to minimally 1/8 times.
13. **Recall**: Press to return to previous channel.
14. **P.Mode**: Press repeatedly to cycle through the picture mode: Hi-Bright, User, Dark, Normal and Vivid.
15. **P.Size**: Press repeatedly to cycle through the picture size that best corresponds your viewing requirements: Normal, Full, Wide1, Wide2, Wide3, 4:3, No scale, Panoramic and Normal.
    When in POP mode, it can select picture size is: Full, 4:3 and Normal.
16. **Vol** ∧ / ∨: Press to adjust the volume.
17. **Ch ≫/≪** : Press to scan through channels. To scan quickly through channels, press and hold down either channels.
18. **Freeze**: Press to freeze the picture, press again to restore the picture.

(Continued on next page)

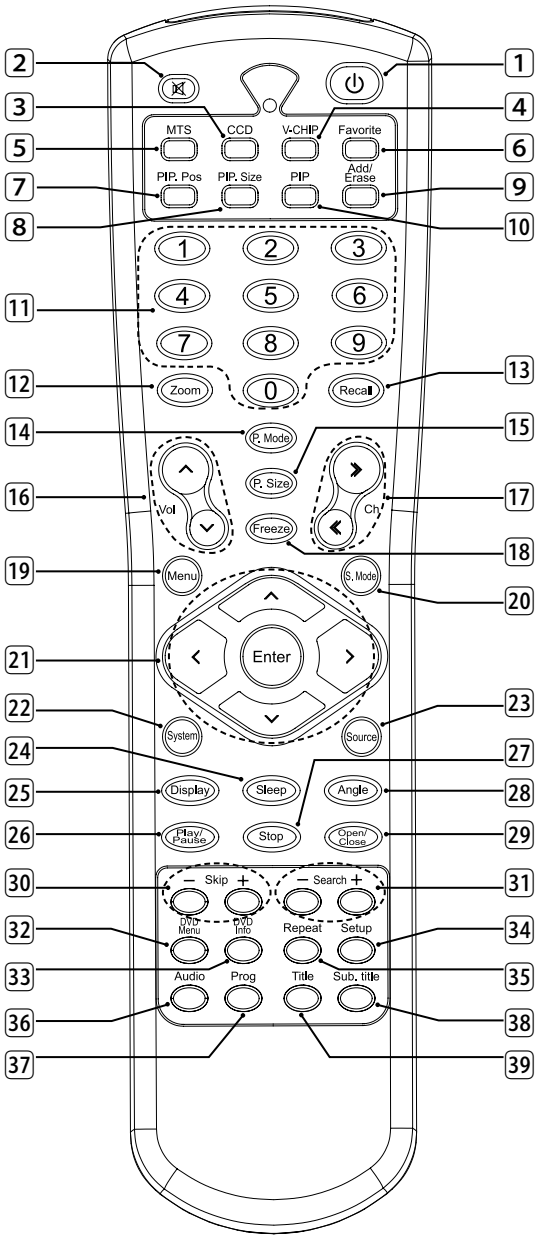

19 **Menu**: Press to enter into the on-screen setup menu, press again to exit.

20 **S.Mode**: Press repeatedly to cycle through the sound mode: Normal, News, Cinema, Flat and User.

21 <, ∧, ∨, >, **Enter**: Press <, ∧, ∨, > to move the on-screen cursor. To select an item, press ENTER to confirm. And it can also press ∧ or ∨ to scan through channels, press < or > to adjust the volume excepting DVD mode.

22 **System**: Press repeatedly to cycle through the system options: AUTO and NTSC3.58.
(This button is inactive for TV, VGA, COMPONENT input source.)

23 **Source**: Press to select the signal source, such as TV, AV, S-Video, Component, DVD or VGA.

24 **Sleep**: Press repeatedly until it displays the time in minutes (5 Min, 10 Min, 15 Min, 30 Min, 60 Min, 90 Min, 120 Min and, OFF) that you want the TV to remain on before shutting off. To cancel sleep time, press **Sleep** button repeatedly until sleep OFF appears.

25 **Display**: Press to display the channel information and it disappear after 3 seconds.

26 **Play/Pause**: Press to play or pause the DVD disc.

27 **Stop**: Press to stop playing the disc.

28 **Angle**: Press to select desired viewing angle of the Video (disc feature).

29 **Open/Close**: Press to open or close the disc tray.

30 **Skip+/-**: Press to skip the forward or backward.

31 **Search+/-** : Press to search the forward or backward.

32 **DVD Menu**: Press to return DVD disc menu.

(Continued on next page)

33 **DVD Info**: Press to display DVD information.
34 **Setup**: Press to display a menu. Press it again to exit menu.
35 **Repeat**: Press repeatedly to cycle through the options: CHAPTER, TITLE, ALL and nothing.
36 **Audio**: Press to select desired audio track.
37 **Prog**: Press to display the program menu. Press it again to exit.
38 **Sub. title**: Press to select desired DVD subtitle.
39 **Title**: Press to display to DVD disc title.

*Note: Press **Ch** ≫/≪ on the remote control can turn on TV set from last preview mode.*

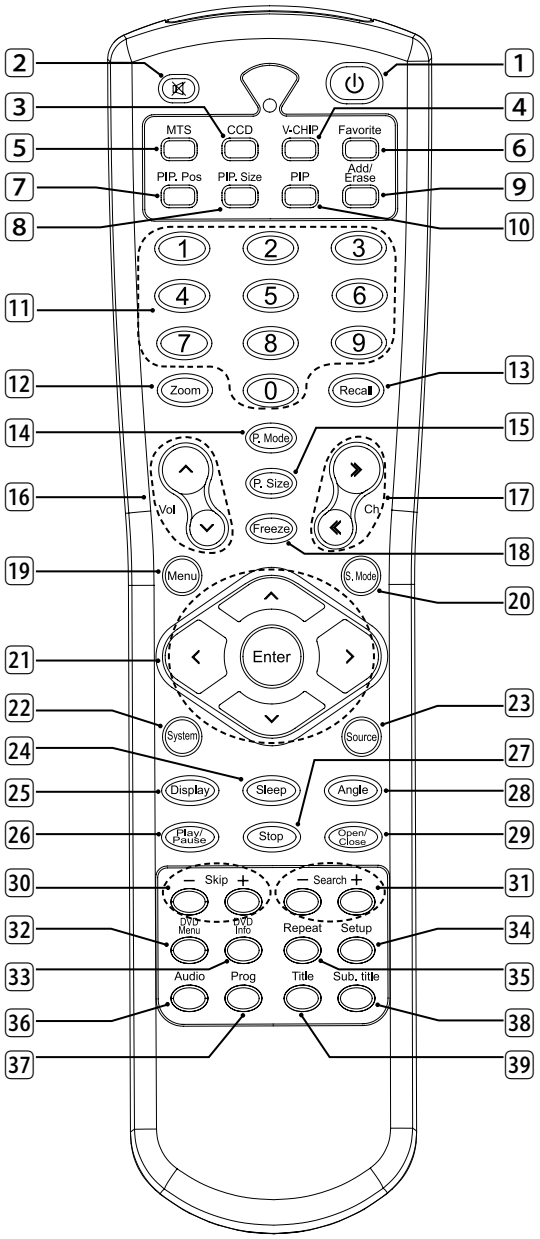

Reference No : LCT32ADTD

Technical Data

1. Power supply	**TV**	**AC 100-240, 50/ 60Hz**
	Remote control	**Battery 3V (UM-3/R6P/AA×2)**
2. TV system	**RF input**	**NTSC M**
	Video input	**PAL/NTSC 3.58**
3. Receiving channels	**TV**	**VHF-L : 2~6CH** **VHF-H : 7~13CH** **UHF : 14~69CH**
	CATV	**1~125CH**
4. Intermediate frequencies	**Picture**	**45.75MHz**
5. Scanning	**Horizontal (Hz)**	**15625/15750**
	Vertical (Hz)	**50/60**
6. AC plug		**UL Plug**
7. Panel		**V320B1-L01**
8. Speaker	**Internal**	**8 ohm 10W (max) ×2**
9. Operating temperature	**Fulfill all specifications**	**15°C ~ 30°C**
	Accept picture/sound reproduction	**5°C ~ 33°C**
10. Operating relative humidity	**Fulfill all specifications**	**45% ~ 75%**
	Accept picture/sound reproduction	**20% ~ 80%**
11. Electrical & optical specification		**See the attachment 1.**
12. Circuit diagram drawing No.		**LCT32HAB**
13. Cabinet		
14. Cabinet color		
15. Packing		**1 set per**
16. Container stuffing method		**RD/05/P/LC26HAB/CSI/02 REV: 01**
17. Dimension (mm) (No packing)	**LCD-TV**	**799(W)× 569.7(H)× 107(D)mm (w/o Stand)**
		799(W) × 635.8(H)× 267.5(D)mm (with Stand)
	Remote control unit	**183(L) × 53(W) ×28(T)mm**
18. Net weight	**LCD-TV**	**18.8Kg (with Stand) approx.**
	Remote control	**70g (approx.)**
19. Cell Defect		**Subject to Panel supplier specification**

Attachment 1： Electrical & Optical Specification

No.	*Items*	*Instruction*	*Typical*	*Limit*	*Unit*
1	Video sensitivity	For 30dB S/N	44	≤51	dBuV
2	FM sound sensitivity	For 30dB S/N	21	≤35	dBuV
3	Color sensitivity	For RF transmission	37	≤40	dBuV
4	CCD sensitivity	TV screen refreshes 40 times number of mistakes≤8	43	≤50	dBuV
5	Minimum NICAM threshold	Without crackline noise	N/A	N/A	dBuV
6	Stereo Channel Separation	BTSC.	18	≥15	dB
7	AGC static characteristic	Accept. Picture/Sound repr.	90	≥90	dBuV
8	Selectivity	Adjacent sound carrier	30	≥28	dB
		Below adjacent sound carrier	30	≥30	
		Adjacent picture carrier	45	≥40	
		Up adjacent picture carrier	40	≥30	
9	IF rejection		55	≥45	dB
10	Image rejection	VHF	57	≥45	dB
		UHF	55	≥40	
11	AFT pull-in range		±1.0	≥|±1.0|	MHz
12	Chroma sync pull-in range		±500	≥|±200|	Hz
13	Color killer function		-11	≤-10	dB
14	Resolution — RF — Horizontal — PAL		300	≥300	Lines
	Resolution — RF — Horizontal — NTSC		260	≥240	Lines
	Resolution — RF — Vertical — PAL		410	≥400	Lines
	Resolution — RF — Vertical — NTSC		320	≥300	Lines
	Resolution — Video — Horizontal		450	≥450	Lines
	Resolution — Video — Vertical		400	≥400	Lines

15	Color Coordination	White	Xw	Full Pattern	0.295	0.295±0.02	
			Yw		0.300	0.300±0.02	
16	View Angle(Lo/3)	Horizontal			170	≥170	Degree
		Vertical					
17	Overscan			Cross hatch signal	96	94~98	%
18	Picture position			In all direction	±2	≤|±3|	mm
19	H sync pull-in range				±400	≥|±200|	Hz
20	V sync pull-in range				6	≥6	Hz
21	Audio frequency response			±3dB ref. to 1KHz	0.15~12	0.2~12	KHz

22	**Max Audio Output Power**		**7×2**	**≥5.0×2**	**W**
23	**Audio output power 10% THD**	**1KHz 10% THD**	**6×2**	**≥4.0×2**	**W**
24	**THD**	**Po=0.5W**	**0.5**	**≤3**	**%**
25	**Signal to buzz ratio**	**coeighting**	**50**	**≥30**	**dB**
26	**Minimum volume hum**	**coeighting**	**6**	**≤10**	**mVrms**
27	**Maximum woofer output power**		**N/A**	**N/A**	**W**
28	**Woofer audio frequency response**	**±3dB ref. to 15Hz AV mode**	**N/A**	**N/A**	**Hz**
29	**Tone low frequency**	**100Hz ref. to 1KHz AV mode**	**±8**	**≥|±3|**	**dB**
30	**Tone high frequency**	**10KHz ref. to 1KHz AV mode**	**±8**	**≥|±3|**	**dB**
31	**Balance**	**Center**	**0**	**≤|±2|**	**dB**
		Max.	**3**	**>2**	
		Min.	**-35**	**≤-30**	

32	**Video input level**		**1.0**	**1±0.3**	**Vpp**
33	**Audio input level*（1）**		**1.0 ***	**0.5±0.3**	**Vrms**
34	**Video output level**		**N/A**	**N/A**	**Vrms**
35	**Audio output level*（2）**		**0.3 ***	**0.5±0.3**	**Vrms**
36	**AV Audio input max. level**		**2**	**≤2**	**Vrms**
37	**AV Audio output L/R Separation**		**35**	**≥30**	**dB**
38	**Power consumption**	**Operating**	**200**	**≤200**	**W**
		Stand by	**3**	**≤5**	**W**
39	**IR receiving distance**	**0 Degree**	**7**	**≥6**	**m**
40	**IR receiving angle** **left/right**	**5m**	**60**	**≥45**	**Degree**
	Up/down		**20**	**≥15**	**Degree**
41	**Dielectric strength**	**DC 3KV 1min.**	**5**	**≤10**	**mArms**
42	**The vibration noise from electromagnetic devices in LCD-TV set**	**The distance between the tester and the LCD-TV set is four times as many as the screen height**	**No obvious vibration noise can be heard**		

Reference No : LCT3201TD

Test Condition

All tests shall be performed under the following conditions unless otherwise specified

1	**Picture Modulation**	**87.5%**
2	**Sound Modulation**	**27KHz Dev. For DK/I/BG** **15KHz Dev. For M/N**
3	**Picture to Sound Ratio**	**10dB**
4	**Sound Artificial Load Resistor**	**8 ohm**
5	**Video signal**	**Stair and Special**
6	**Audio signal**	**1KHz sine wave 0.5Vrms**
7	**Other conditions:** **A. Switch LCD-TV on and let it warm up for more than 30 minutes.** **Viewing distance: 3H (H: Panel High) in front of LCD, about 2M.** **Ambient light: ≤0.1 cd/ m^2** **B. Brightness, Contrast, Saturation, Tint, sharpness set at normal.** **C. Connect RMS volt meter to speaker terminals and adjust the LCD volume to get 500mW RMS power at each terminals.** **D. With image sticking protection of LCD module. The luminance will descend by time on a same still screen and rapidly go down in 5 minutes, when measuring the color tracking and luminance of a same still screen, be sure to accomplish the measurement in one minute to ensure its accuracy.** **E. Due to the structure of LCD module. The extra-high-bright same screen should not hold over 5 minutes for fear of branding on the panel.** **F. RF test point: Video output.**	
8	**Note:** ***(1) Now this project cannot fit the limited spec. the typical audio input level is 1.0 Vrms,** ***(2) The audio out level is controlled by the volume level, the range is from 0 to 0.5Vrms.**	

DVD player's spec. For LCD-TV Combo

Division	Section	Remarks
General	name	AKAI
	Marketing Area(setup default language)	USA
	Power supply	+5v,+3.3v
	Power Consumption	15W
	Manufactruer of Loader mechanism	Foryou DL06-LS
DVD Module	Opitical Pick UP	Sanyo HD-62/65
	Chipset used	MTK 1389FE
Playback Disc Type	Playable Media Type	Playable Disc Type: DVD, CD,
	Playable Disc Type	DVD(Single/ Dual layer, Double sided), CD
	Disc Size	8cm/12cm
	Regional code	Regional 1
	NTSC/ PAL Disc playback	O/O
Video	Video output signal	NTSC
	Video DAC	27MHz/ 10bit
Audio	Audio DAC	48Khz/ 96KHz/24-bit:selectable
	Dynamic range	Present
	Dolby digital decoder	Present
	DTS decoder	optional
	SRS + TruSurround for 2 channel	Not present
	3D Virtual surround for 2 channel	Not present
Playback Features	Fast forward/backward	x2,x4,x8,x16,x32
	Slow motion forward	x1/2,x1/4,x1/8,x1/16
	Slow motion backward	optional
	Still picture	Present
	Frame by frame forward/reverse	Forward only (Step function)
	Skip forward/reverse	Present
	Repeat function	Present
	DVD closed caption	Present
	Transition Effect for picture CD	Not present
	Rotation of picture for picture CDs	Present
	Last Memory	Present
Display user operation	Graphical user interface	Not present
	OSD Language	3 (ENG is base ,SPA and French)
	Subtitle	Present
	Screen saver	Present
	Resume play	Present
	Program function	Present
	PBC ON/OFF	Default on PCB
	Parental lock	Passward : 0000
	Picture mode selector	16:9, 4:3 LB, 4:3 PS(4:3 PS as default)
	Intro scan	Not present
	Digest in VCD	Present, only for PIC CD
	Time search	Present
	Multi angle	Present
	Selectable audio language streams	Present
Front Panel	kalaoke function	x
	VFD/ LED	x
	No. of keys	3(Open/Close, Play, Stop)
Rear Panel	Composite Video output	x
	Component Video output	x
	Progressive scan output (480P)	Present
	2 channel audio output	Present
	Coaxial audio output	Present

LCD COMBO Connection

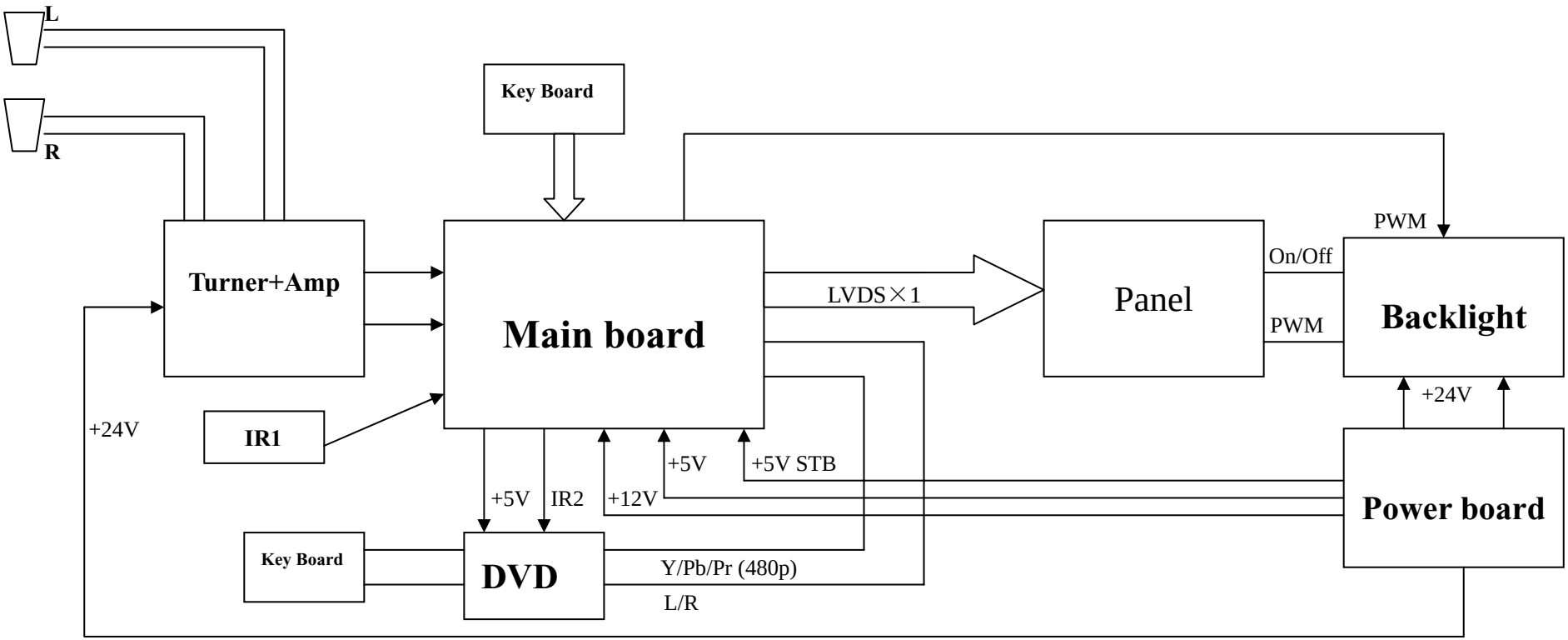

PANEL INVERTER POWER

Dimming
BL_ON/OFF

Inverter_PWR

CE1
470uF/50v

CE2
470uF/50v

C1
0.1uF

C2
0.1uF

Inverter_PWR

PWR_GND

H1 HOLE/GND

H2 HOLE/GND

H3 HOLE/GND

H4 HOLE/GND

FB5
120R

FB6
120R

FB7
120R

FB8
120R

J1

Inverter_PWR

Dimming
BL_ON/OFF

12x1 W/HOUSING R.A
SIP12\2

J3

C3
0.1uF

PWR_GND

FB1
120R
1206

FB2
120R
1206

10x1 W/HOUSING R.A.
SIP10\2

J2

INVERTER_PWR

PWR_GND

8x1 W/HOUSING
SIP6\2.54

H5 HOLE/GND

FB9
120R

Title	<Title>	
Size A	Document Number <Doc>	Rev <RevCode>
Date: Wednesday, August 24, 2005	Sheet 1 of 2	

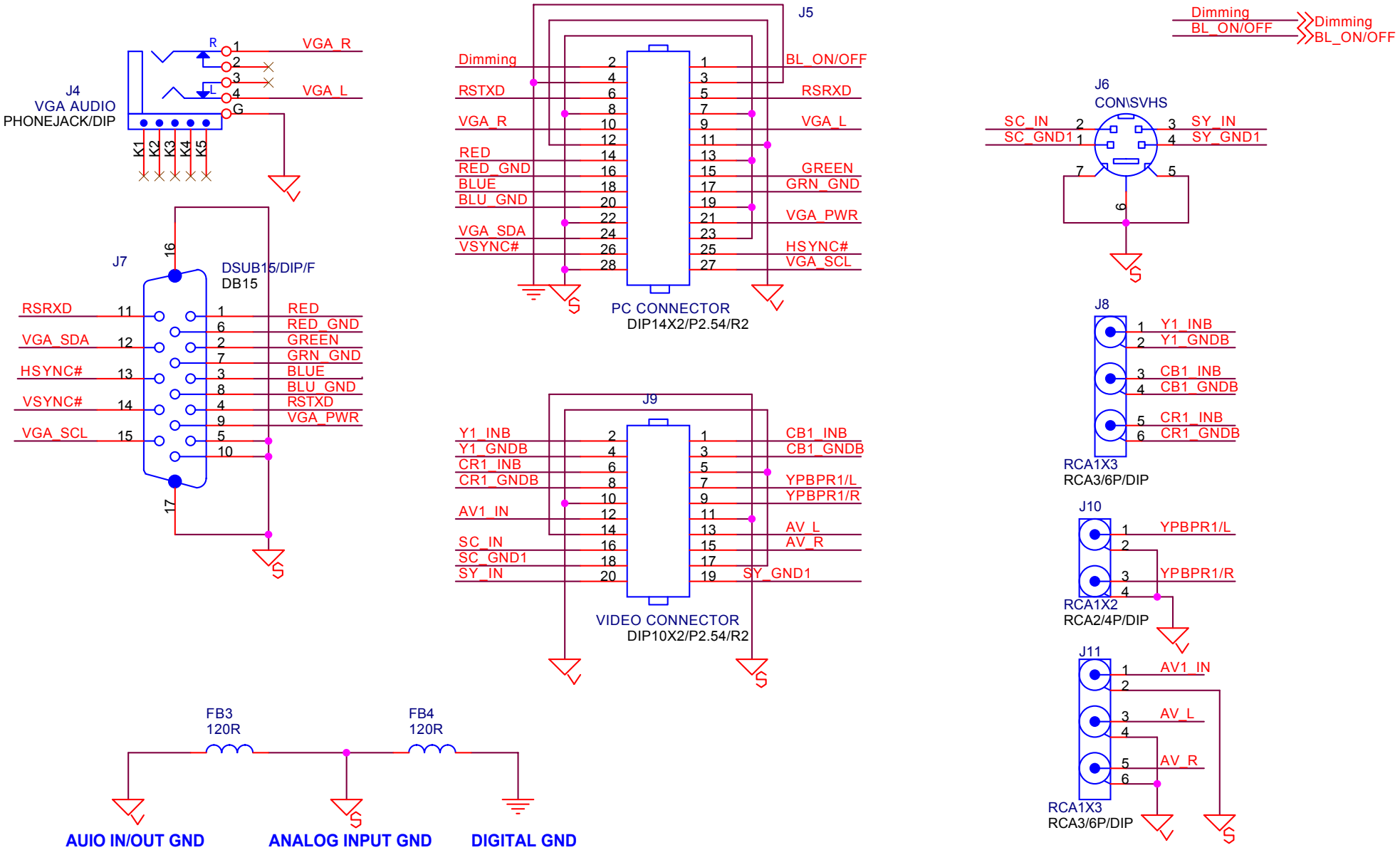

15 1

15 106

Title	<Title>	
Size A	Document Number <Doc>	Rev <RevCode>
Date: Wednesday, August 24, 2005	Sheet 2 of 2	

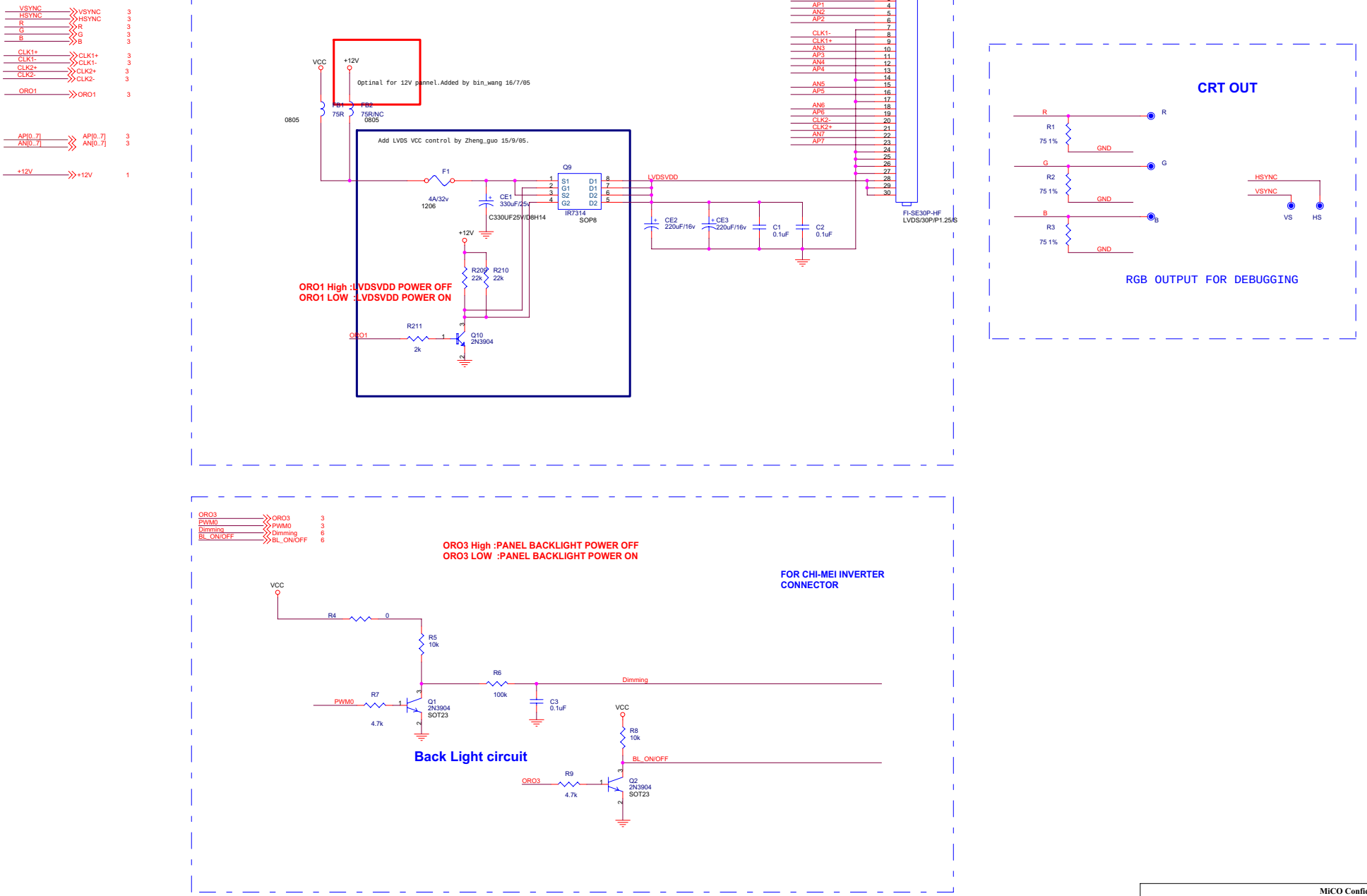

		MiCO Confidential
Title	MiCO LCD TV - MediaTek MT8203 Solution	
Size: C	Doc Number: LVDS/CRT/BACKLIGHT CONTROL	Rev: V0.1
Date: Wednesday, September 28, 2005	Sheet 1 of 10	

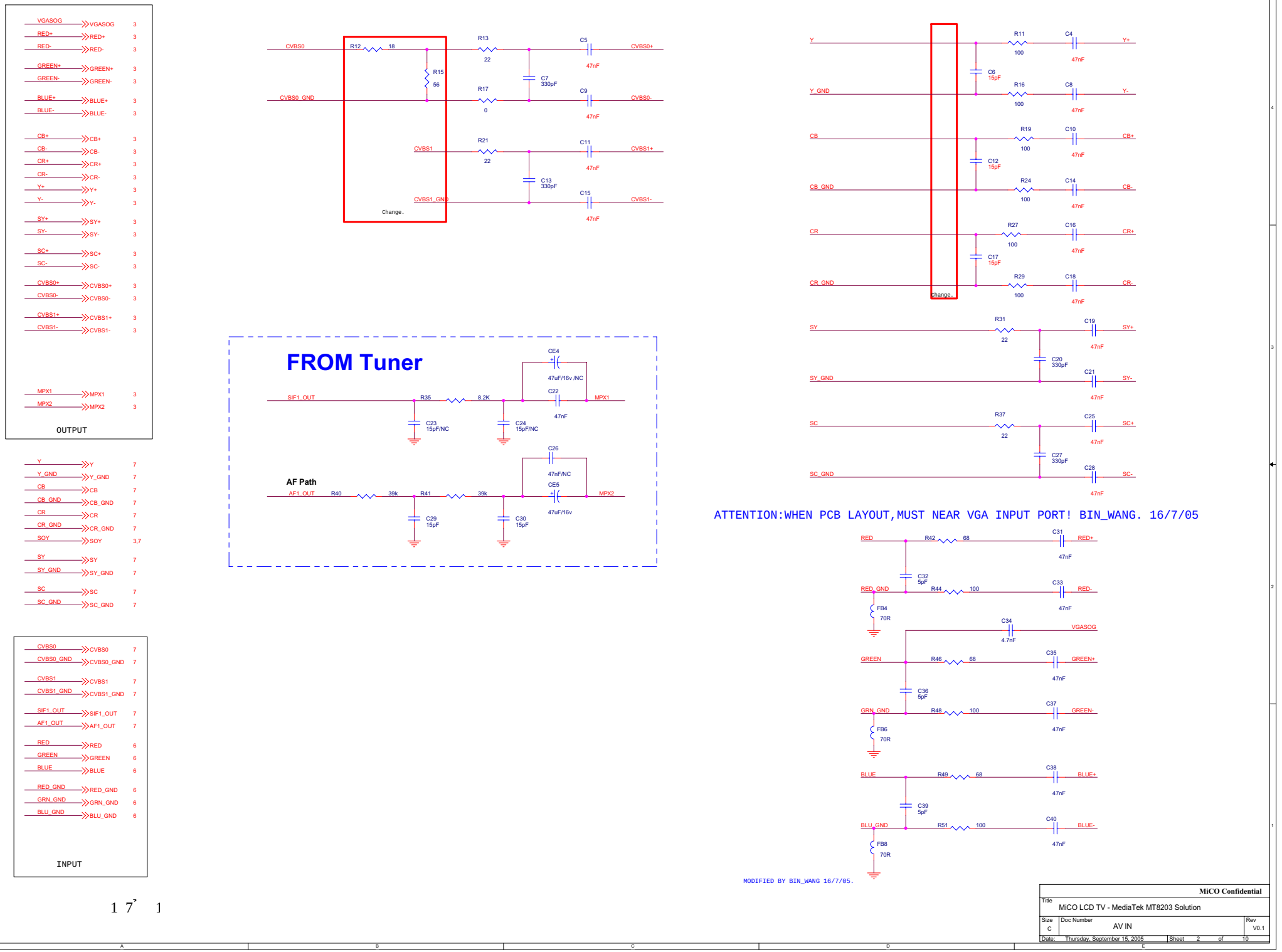
VGASOG
RED+
RED-
GREEN+
GREEN-
BLUE+
BLUE-
CB+
CB-
CR+
CR-
Y+
Y-
SY+
SY-
SC+
SC-
CVBS0+
CVBS0-
CVBS1+
CVBS1-
MPX1
MPX2
OUTPUT
Y
Y_GND
CB
CB_GND
CR
CR_GND
SOY
SY
SY_GND
SC
SC_GND
CVBS0
CVBS0_GND
CVBS1
CVBS1_GND
SIF1_OUT
AF1_OUT
RED
GREEN
BLUE
RED_GND
GRN_GND
BLU_GND
INPUT
R12 18
R13 22
R15 56
R17 0
C5 47nF
C7 330pF
C9 47nF
R21 22
C11 47nF
C13 330pF
C15 47nF
Change.
FROM Tuner
SIF1_OUT
R35 8.2K
CE4 47uF/16v /NC
C22 47nF
C23 15pF/NC
C24 15pF/NC
MPX1
AF Path
AF1_OUT
R40 39k
R41 39k
C26 47nF/NC
CE5 47uF/16v
C29 15pF
C30 15pF
MPX2
R11 100
C4 47nF
C6 15pF
R16 100
C8 47nF
R19 100
C10 47nF
C12 15pF
R24 100
C14 47nF
R27 100
C16 47nF
C17 15pF
R29 100
C18 47nF
R31 22
C19 47nF
C20 330pF
C21 47nF
R37 22
C25 47nF
C27 330pF
C28 47nF
ATTENTION:WHEN PCB LAYOUT,MUST NEAR VGA INPUT PORT! BIN_WANG. 16/7/05
R42 68
C31 47nF
C32 5pF
R44 100
C33 47nF
FB4 70R
C34 4.7nF
R46 68
C35 47nF
C36 5pF
R48 100
C37 47nF
FB6 70R
R49 68
C38 47nF
C39 5pF
R51 100
C40 47nF
FB8 70R
MODIFIED BY BIN_WANG 16/7/05.
MiCO Confidential
Title
MiCO LCD TV - MediaTek MT8203 Solution
Size C
Doc Number AV IN
Rev V0.1
Date: Thursday, September 15, 2005
Sheet 2 of 10

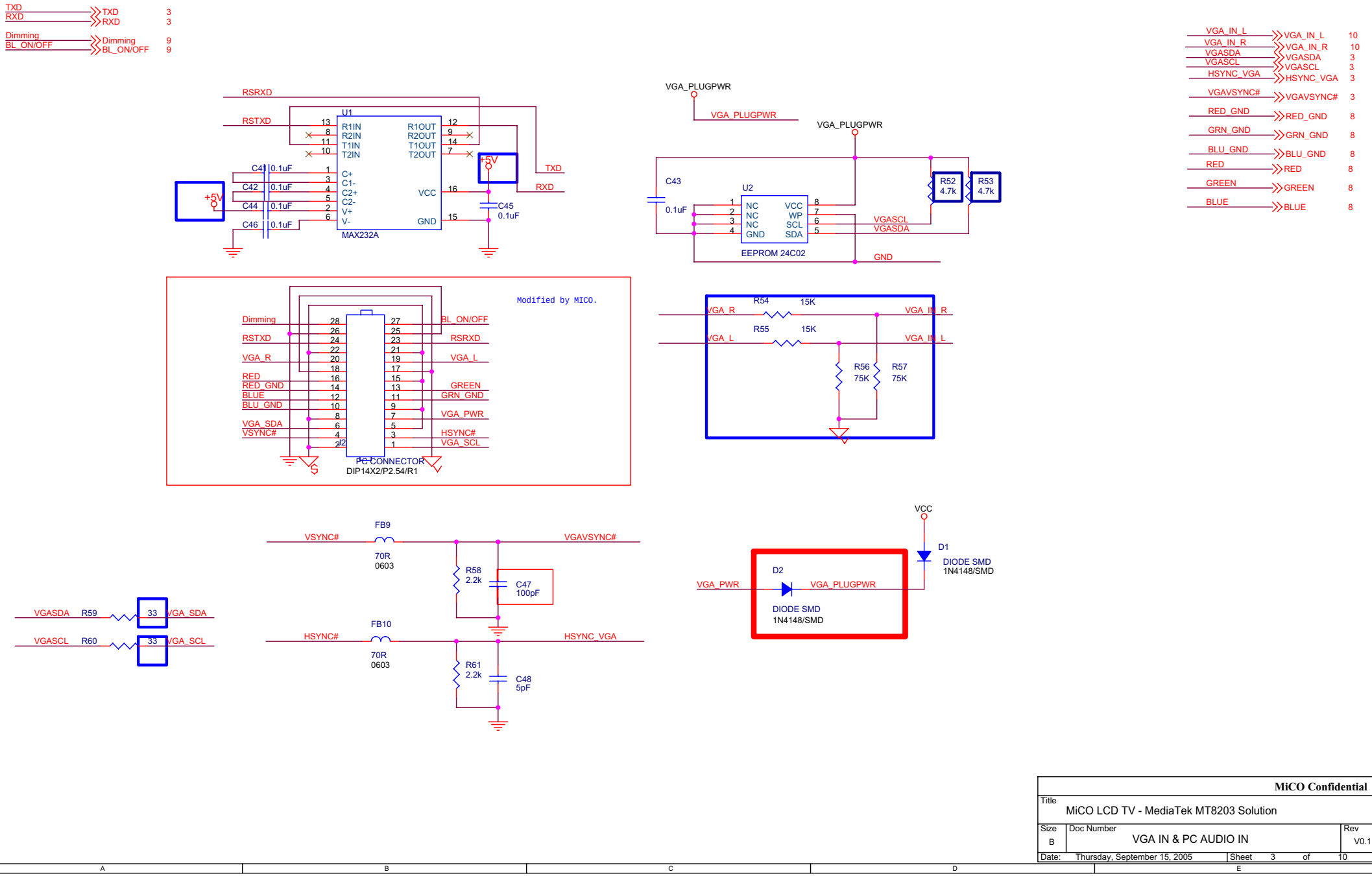

MiCO Confidential

Title: MiCO LCD TV - MediaTek MT8203 Solution		
Size: B	Doc Number: VGA IN & PC AUDIO IN	Rev: V0.1
Date: Thursday, September 15, 2005	Sheet 3 of 10	

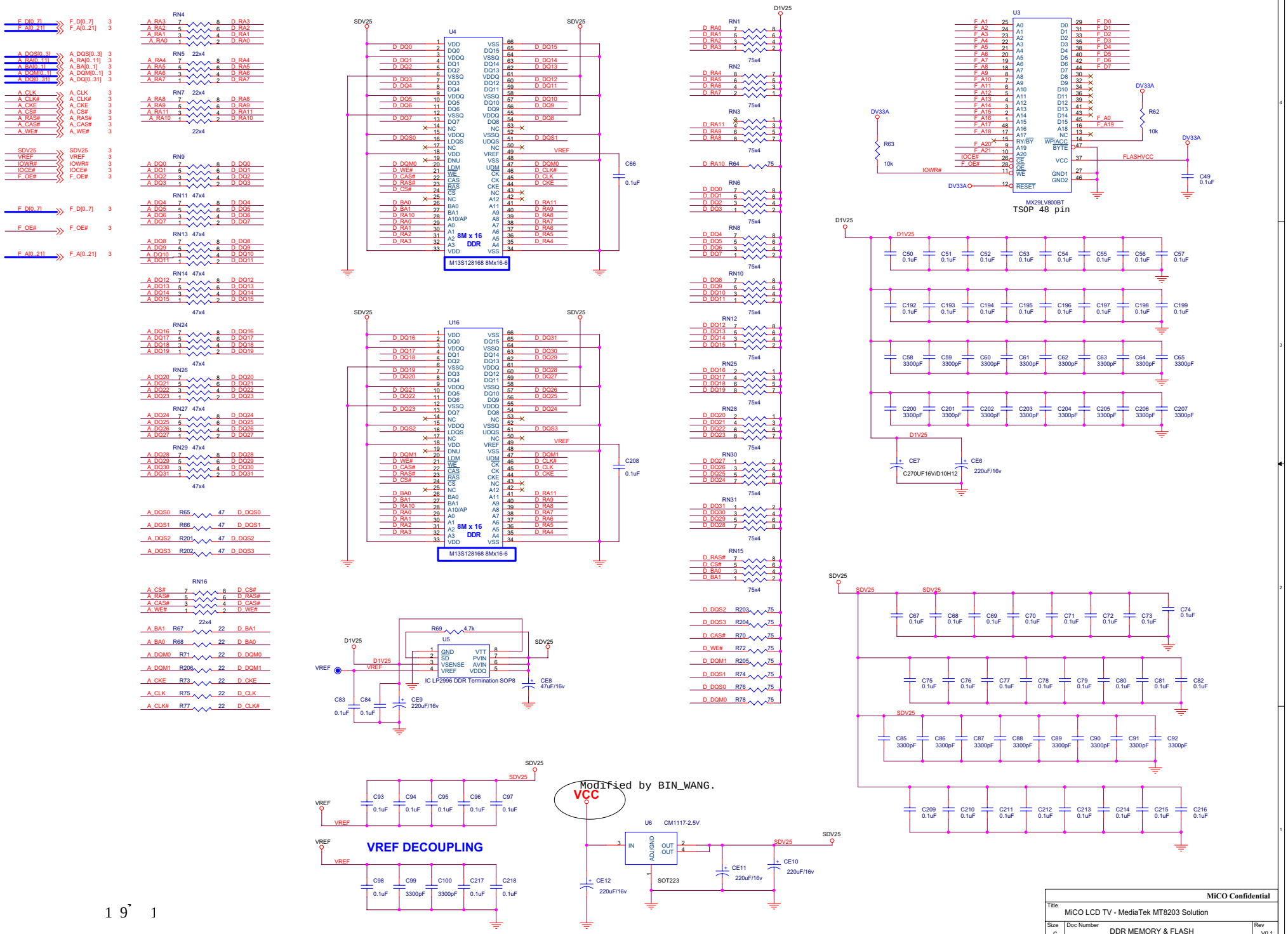
F_D[0..7]
F_A[0..21]
A_DQS[0..3]
A_RA[0..11]
A_BA[0..1]
A_DQM[0..1]
A_DQ[0..31]
A_CLK
A_CLK#
A_CKE
A_CS#
A_RAS#
A_CAS#
A_WE#
SDV25
VREF
IOWR#
IOCE#
F_OE#
RN4
RN5 22x4
RN7 22x4
RN9
RN11 47x4
RN13 47x4
RN14 47x4
RN24
RN26
RN27 47x4
RN29 47x4
RN16
U4
U16
8M x 16 DDR
M13S128168 8Mx16-6
C66 0.1uF
C208 0.1uF
R65 47 D_DQS0
R66 47 D_DQS1
R201 47 D_DQS2
R202 47 D_DQS3
RN1
RN2 75x4
RN3
RN6
RN8
RN10
RN12
RN25
RN28
RN30
RN31
RN15
R203 75 D_DQS2
R204 75 D_DQS3
R70 75 D_CAS#
R72 75 D_WE#
R205 75 D_DQM1
R74 75 D_DQS1
R76 75 D_DQS0
R78 75 D_DQM0
U3
MX29LV800BT
TSOP 48 pin
R62 10k
R63 10k
R64 75
C49 0.1uF
C50 0.1uF
C51 0.1uF
C52 0.1uF
C53 0.1uF
C54 0.1uF
C55 0.1uF
C56 0.1uF
C57 0.1uF
C192 0.1uF
C193 0.1uF
C194 0.1uF
C195 0.1uF
C196 0.1uF
C197 0.1uF
C198 0.1uF
C199 0.1uF
C58 3300pF
C59 3300pF
C60 3300pF
C61 3300pF
C62 3300pF
C63 3300pF
C64 3300pF
C65 3300pF
C200 3300pF
C201 3300pF
C202 3300pF
C203 3300pF
C204 3300pF
C205 3300pF
C206 3300pF
C207 3300pF
CE7 C270UF16V/D10H12
CE6 220uF/16v
C67 0.1uF
C68 0.1uF
C69 0.1uF
C70 0.1uF
C71 0.1uF
C72 0.1uF
C73 0.1uF
C74 0.1uF
C75 0.1uF
C76 0.1uF
C77 0.1uF
C78 0.1uF
C79 0.1uF
C80 0.1uF
C81 0.1uF
C82 0.1uF
C85 3300pF
C86 3300pF
C87 3300pF
C88 3300pF
C89 3300pF
C90 3300pF
C91 3300pF
C92 3300pF
C209 0.1uF
C210 0.1uF
C211 0.1uF
C212 0.1uF
C213 0.1uF
C214 0.1uF
C215 0.1uF
C216 0.1uF
R69 4.7k
U5
IC LP2996 DDR Termination SOP8
C83 0.1uF
C84 0.1uF
CE9 220uF/16v
CE8 47uF/16v
C93 0.1uF
C94 0.1uF
C95 0.1uF
C96 0.1uF
C97 0.1uF
VREF DECOUPLING
C98 0.1uF
C99 3300pF
C100 3300pF
C217 0.1uF
C218 0.1uF
Modified by BIN_WANG.
VCC
U6 CM1117-2.5V
SOT223
CE12 220uF/16v
CE11 220uF/16v
CE10 220uF/16v
MiCO Confidential
Title MiCO LCD TV - MediaTek MT8203 Solution
Size C
Doc Number DDR MEMORY & FLASH
Rev V0.1
Date: Thursday, September 15, 2005
Sheet 4 of 10

MT8203 ANALOG&DIGITAL DECOUPLING

DACVREF 3
DACFS 3
ADCPLLVDD1 3
ADCPLLVDD 3
APLLVDD 3
ANALOGVDD 3
VPLLVDD 3
LVDDA 3
ADCVDD 3
DACVDD 3
AVCM 3
VOCM 3
VICM 3
VREFP4 3
VREFN4 3
ADCVDD0 3
PWM2VREF 3
AUXTOP 3
AUXBOTTOM 3
REXTA 3
APLL_CAP 3
XTALI 3
XTALO 3
ADCVDD4 3

ADDED BASE ON P1V5 COMMON BOARD BY BIN_WANG 16/7/05.

FOR DACVDD

FOR ADCVDD

Note for Fix or Adj Regulator

U7 CM1117-3.3V

AZ1117	Rdown	Rup
Fix regulator	0 ohm	OFF
Adj regulator	180 1%	110 1%

1.25x(1+Rdown/Rup)

1.25x(1+180/110)=3.3V

P1-V5

ADCVDD4

VFEVDD1

0603 PUT ON NEARLY BGA

0603 PUT ON NEARLY BGA

MiCO Confidential

Title: MiCO LCD TV - MediaTek MT8203 Solution

Size: C | Doc Number: MT8203 ANALOG&DIGIT DECOUPLE | Rev: V0.1

Date: Thursday, September 15, 2005 | Sheet 5 of 10

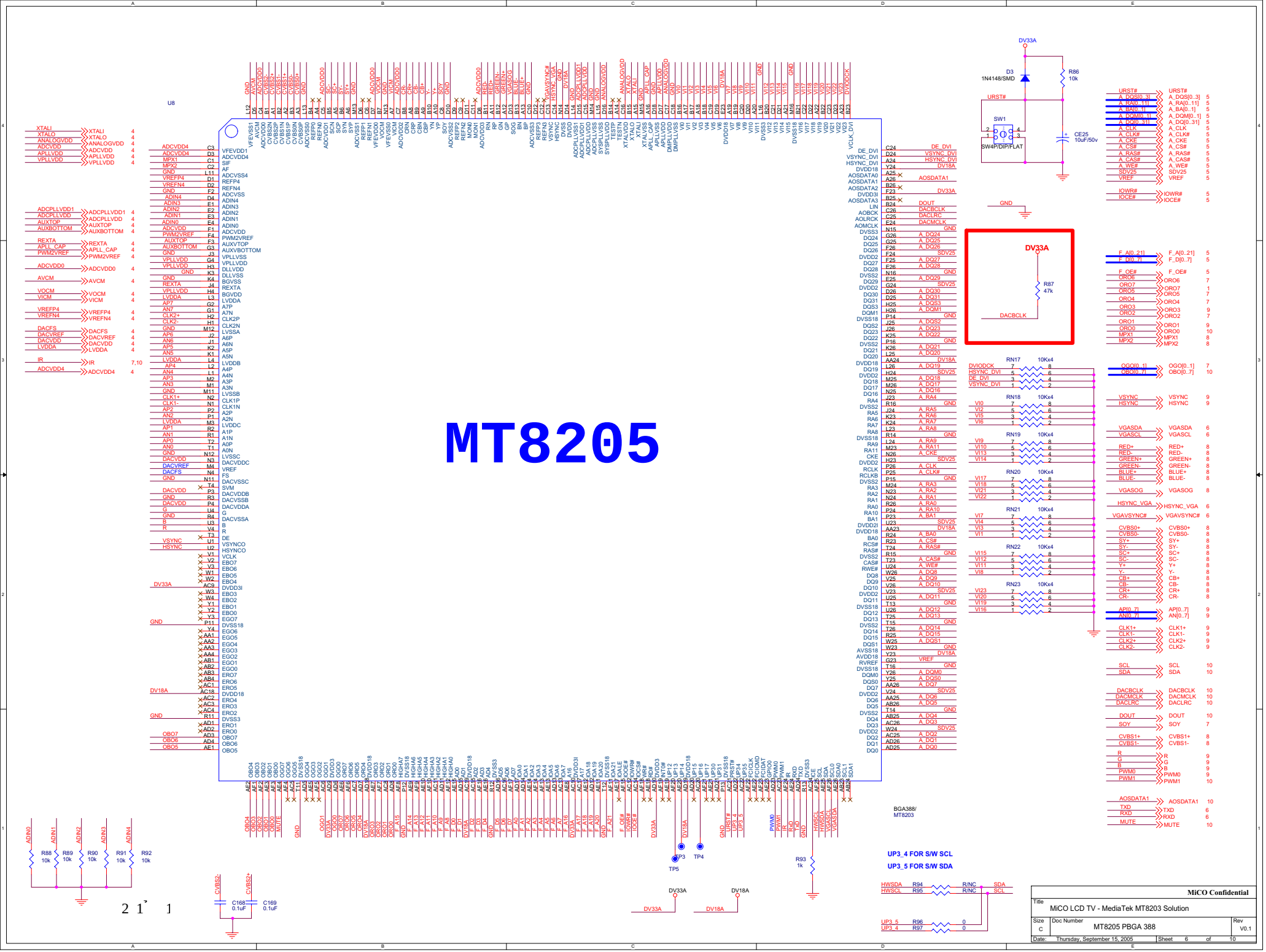
MT8205
U8
BGA388/
MT8203
UP3_4 FOR S/W SCL
UP3_5 FOR S/W SDA
DV33A
DV18A
DACBCLK
SW1
SW4P/DIP/FLAT
D3
1N4148/SMD
R86
10k
CE25
10uF/50v
R87
47k
R88
10k
R89
10k
R90
10k
R91
10k
R92
10k
R93
1k
C168
0.1uF
C169
0.1uF
TP3
TP4
TP5
MiCO Confidential
Title
MiCO LCD TV - MediaTek MT8203 Solution
Size
C
Doc Number
MT8205 PBGA 388
Rev
V0.1
Date: Thursday, September 15, 2005
Sheet 6 of 10

Power ON alive source

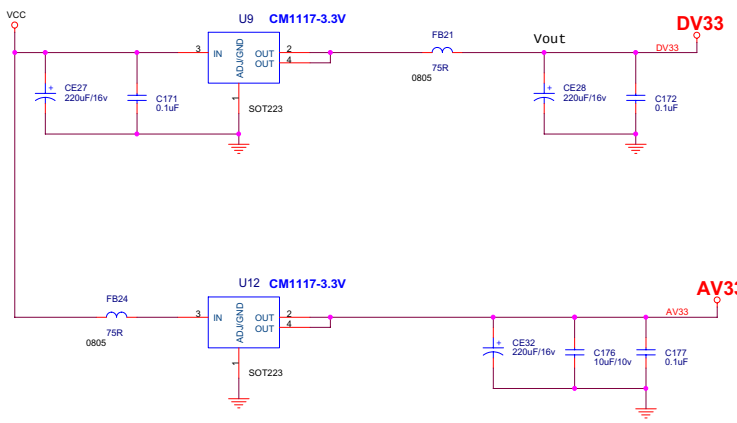

1.25x(1+180/110)=3.3V

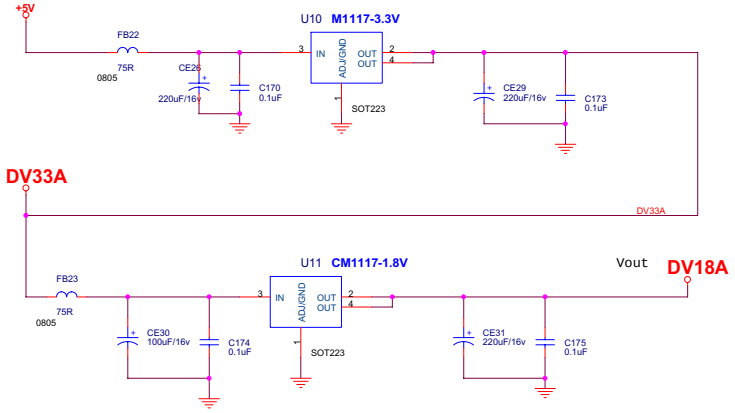

1.25x(1+300/680)=1.8V

	MiCO Confidential	
Title	MiCO LCD TV - MediaTek MT8203 Solution	
Size C	Doc Number LDO	Rev V0.1
Date: Thursday, September 15, 2005	Sheet 7 of 10	

MT8203E (PBGA388) LCDTV BOARD 4 LAYERS

01.INDEX & POWER CONNECTOR
02. LDO
03.MT8203 PBGA 388
04.MT8203 ANALOG&DIGIT DECOUPLE
05.DDR MEMORY & FLASH
06.VGA IN & PC AUDIO IN
07.VIDEO IN & TUNER IO
08. AV IN
09.LVDS/CRT/BACK LIGHT CONTROL
10.AUDIO WM8776/ KEYPAD

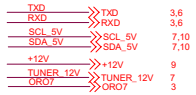

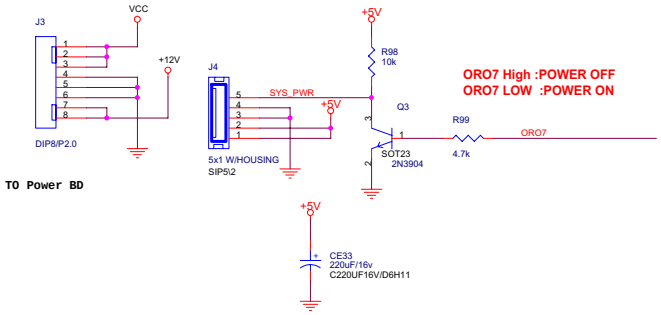

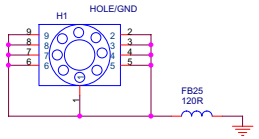

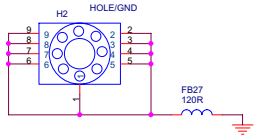

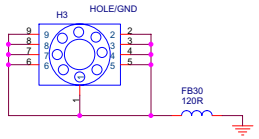

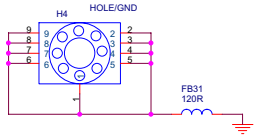

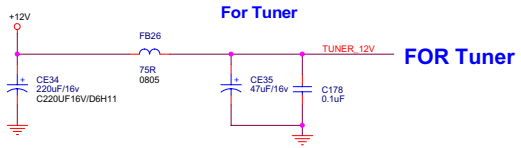

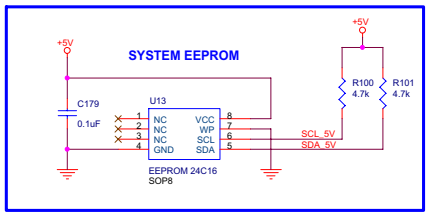

	MiCO Confidential	
Title	MiCO LCD TV - MediaTek MT8203 Solution	
Size C	Doc Number INDEX & POWER CONNECTOR	Rev V0.1
Date: Thursday, September 15, 2005	Sheet 8 of 10	

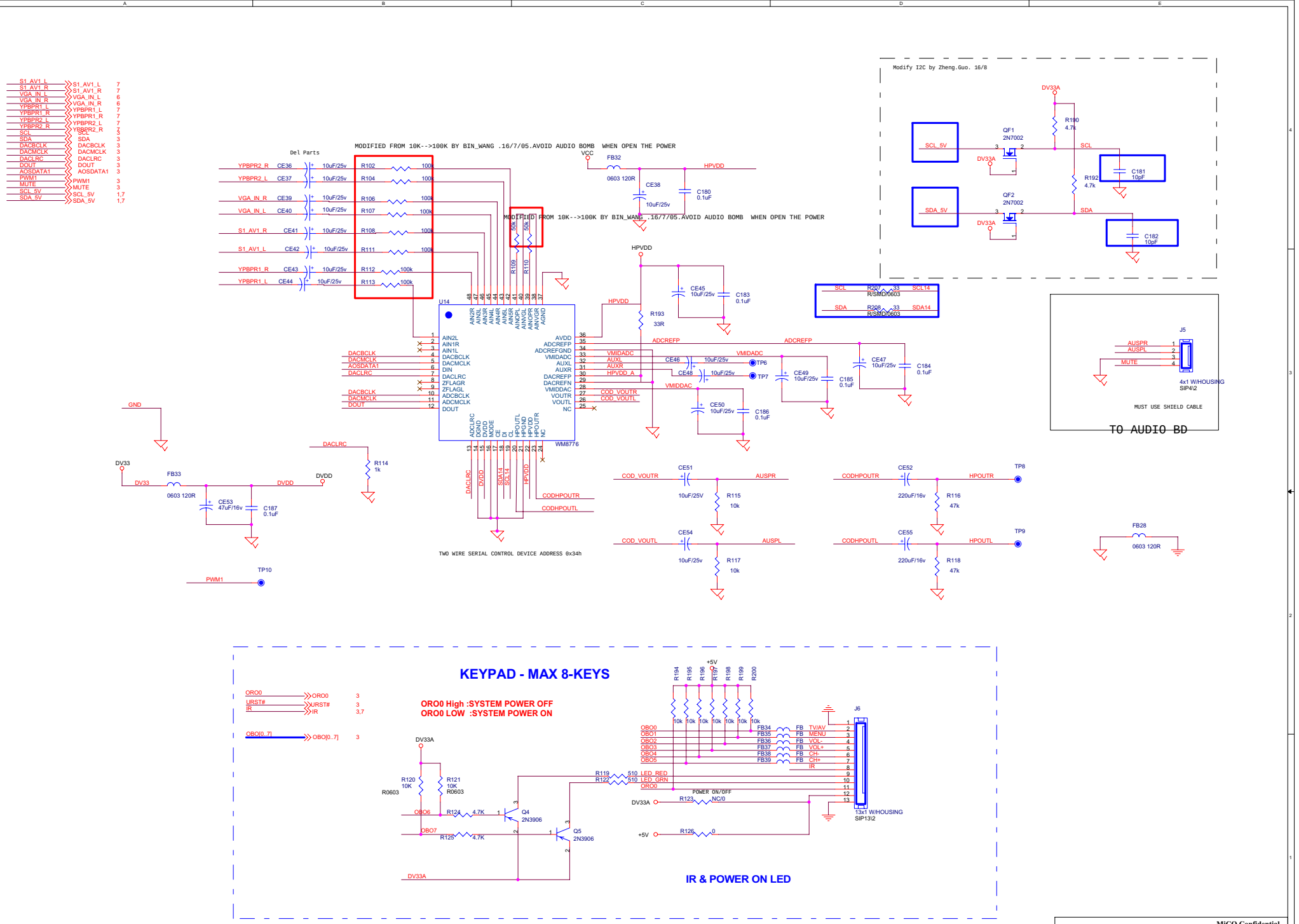

MiCO Confidential

Title	MiCO LCD TV - MediaTek MT8203 Solution	
Size C	Doc Number AUDIO WM8776/ KEYPAD	Rev V0.1
Date: Wednesday, September 28, 2005	Sheet 9 of 10	

CVBS0---TUNER1
CVBS1---FRONT BD AV_IN

AV , TUNER I/O

TU_VCC
TU_12V
J7
SDA_5V
SCL_5V
SIF1_OUT
AF1_OUT
TV_GND
CVBS0
CON12
SIP12X2

DIP11X2/P2.54/R2
VIDEO CONNECTOR
J9

Y
Y_GND
CB
CB_GND
CR
CR_GND
SOY
SY
SY_GND
SC
SC_GND
CVBS0
TV_GND
CVBS1
CVBS1_GND
SIF1_OUT
AF1_OUT
SCL_5V
SDA_5V
TUNER_12V
OGO[0..1]
ORO6
ORO4
ORO5
ORO2
S1_AV1_L
S1_AV1_R
YPBPR1_L
YPBPR1_R
YPBPR2_L
YPBPR2_R
+12V
IR

FB41
70R
CE56
1000uF/16v
C188
0.1uF
FB43
CE57
C189

DVD Connector

8/18 modify by steven
R146 10k
R149 10k
SOT23
2N3904
Q6
IR_DVD
CON10

R157 4.7k
R156 10k
R162 4.7k
Q7
IR7314
SOP8
CE63
470uF/16v
C470UF16V/D8H14
C190 0.1uF
VDVD
J10
CON5

Added by Zheng_guo 21/7/05
Optional for one component.Added by Bin_wang 14/7/05

Y1_INB CE58 22uF/10V Y1SWB
Y1_GNDB R139 10K
CB1_INB CE59 22uF/10V CB1SWB
CB1_GNDB R143 10K
CR1_INB CE60 22uF/10V CR1SWB
CR1_GNDB R148 10K
Y2B CE61 22uF/10V Y2SWB
Y2_GNDB R154 10K
CB2B CE62 22uF/10V CB2SWB
CB2_GNDB R161 10K
CR2B CE64 22uF/10V CR2SWB
CR2_GNDB R166 10K

R137 10K
R140 10K
R144 10K
R151 10K
R155 10K
R163 10K

R138 0/NC
R141 0/NC
R147 0/NC
R153 0/NC
R159 0/NC
R164 0/NC

Y2_INDVD R158 0 Y2B
Y2_GNDB D7 BAV99 R160 75 Y2_GNDB
CB2_INDVD R165 0 CB2B
CB2_GNDB D8 BAV99 R167 75 CB2_GNDB
CR2_INDVD R168 0 CR2B
CR2_GNDB D9 BAV99 R170 75 CR2_GNDB

COMPONENTS SWITCH.

DV33
R171 10K
U15
IDTQS3VH257
TSSOP16/SMD
FB46 70R
R178 0
C191 4.7nF

ORO6
OGO0
OGO1
R160 0
HP_SENSE
TP11

NEARLY YPBPR1-CON.

Y1_GNDB
CB1_GNDB
CR1_GNDB

NEARLY YPBPR2-CON.

Y2_GNDB
CB2_GNDB
CR2_GNDB

AV_L R176 15K S1_AV1_L
AV_R R177 15K S1_AV1_R

MODIFIED BY BIN_WANG.16/7/05

YPBPR1/L R179 15K YPBPR1_L
YPBPR1/R R180 15K YPBPR1_R
YPBPR2/L R188 15K YPBPR2_L
YPBPR2/R R187 15K YPBPR2_R

MODIFIED FROM 15k-->0 BY BIN_WANG 16/7/05.

YPBPR2_R
YPBPR2_L
S1_AV1_L
S1_AV1_R
YPBPR1_R
YPBPR1_L
R181 R182 R183 R184 R185 R186 75K
CR_GND
CB_GND
Y_GND

MiCO Confidential

Title	MiCO LCD TV - MediaTek MT8203 Solution	
Size C	Doc Number VIDEO IN & TUNER IO	Rev V0.1
Date: Thursday, September 15, 2005	Sheet 10 of 10	

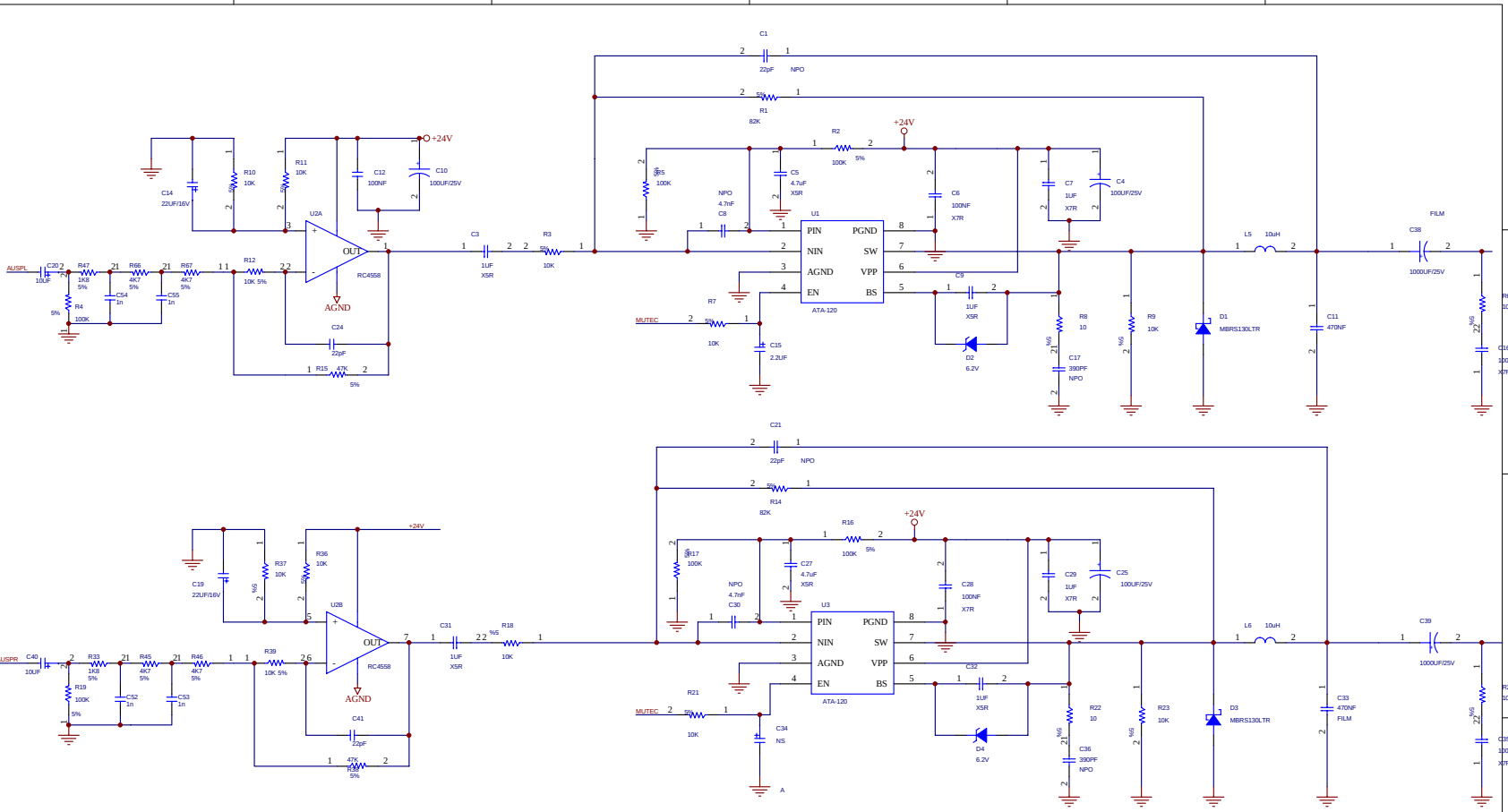

Title			
Size: B	Number	Revision	
Date: 2-Sep-2005	Sheet of		
File: D:\正在进行的项目\LCD TV\LCD TV.Ddb	Drawn By:		

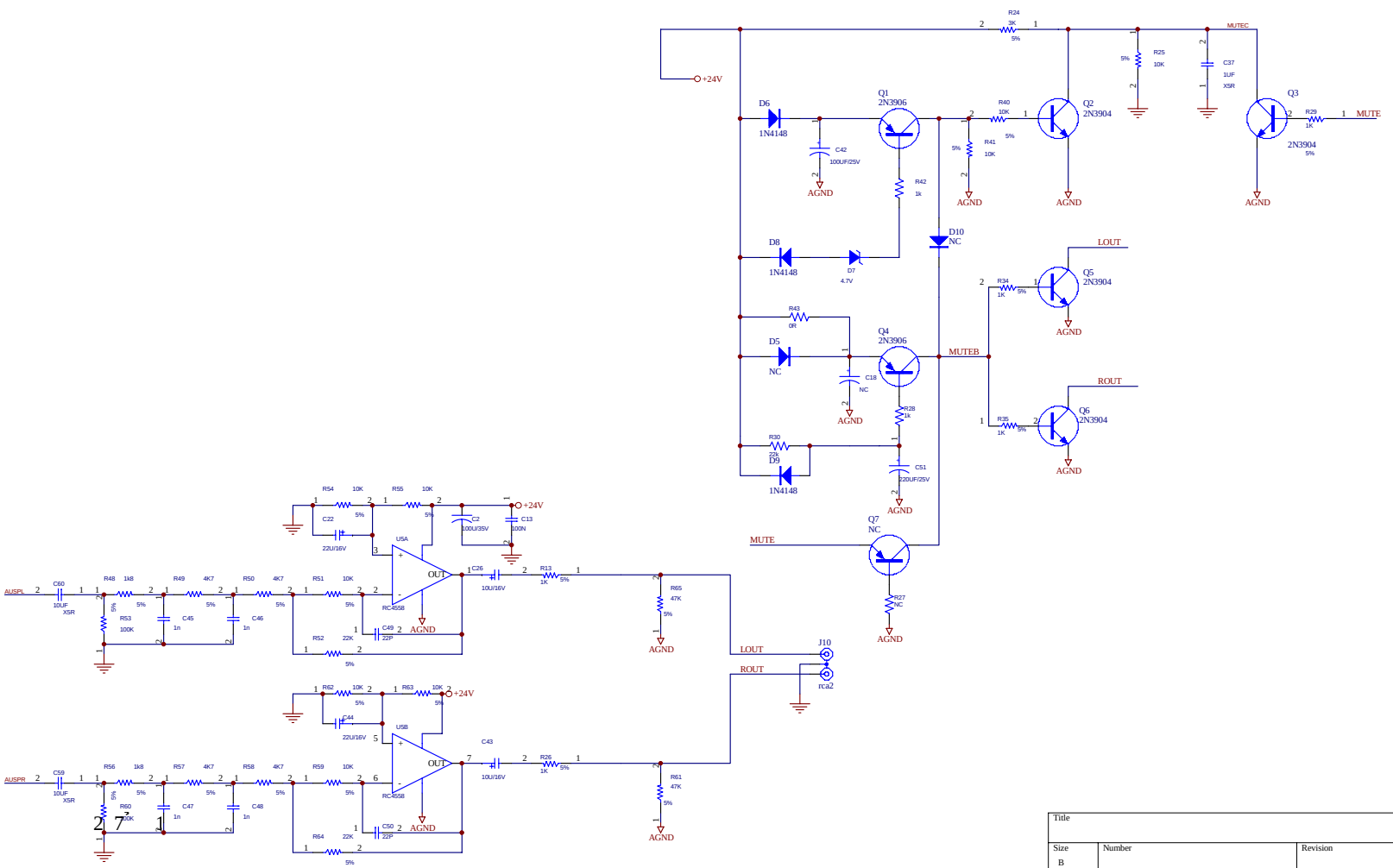

Title			
Size B	Number		Revision
Date:	2-Sep-2005	Sheet	of
File:	D:\正在进行的项目\LCD TV\LCD TV.Ddb	Drawn By:	

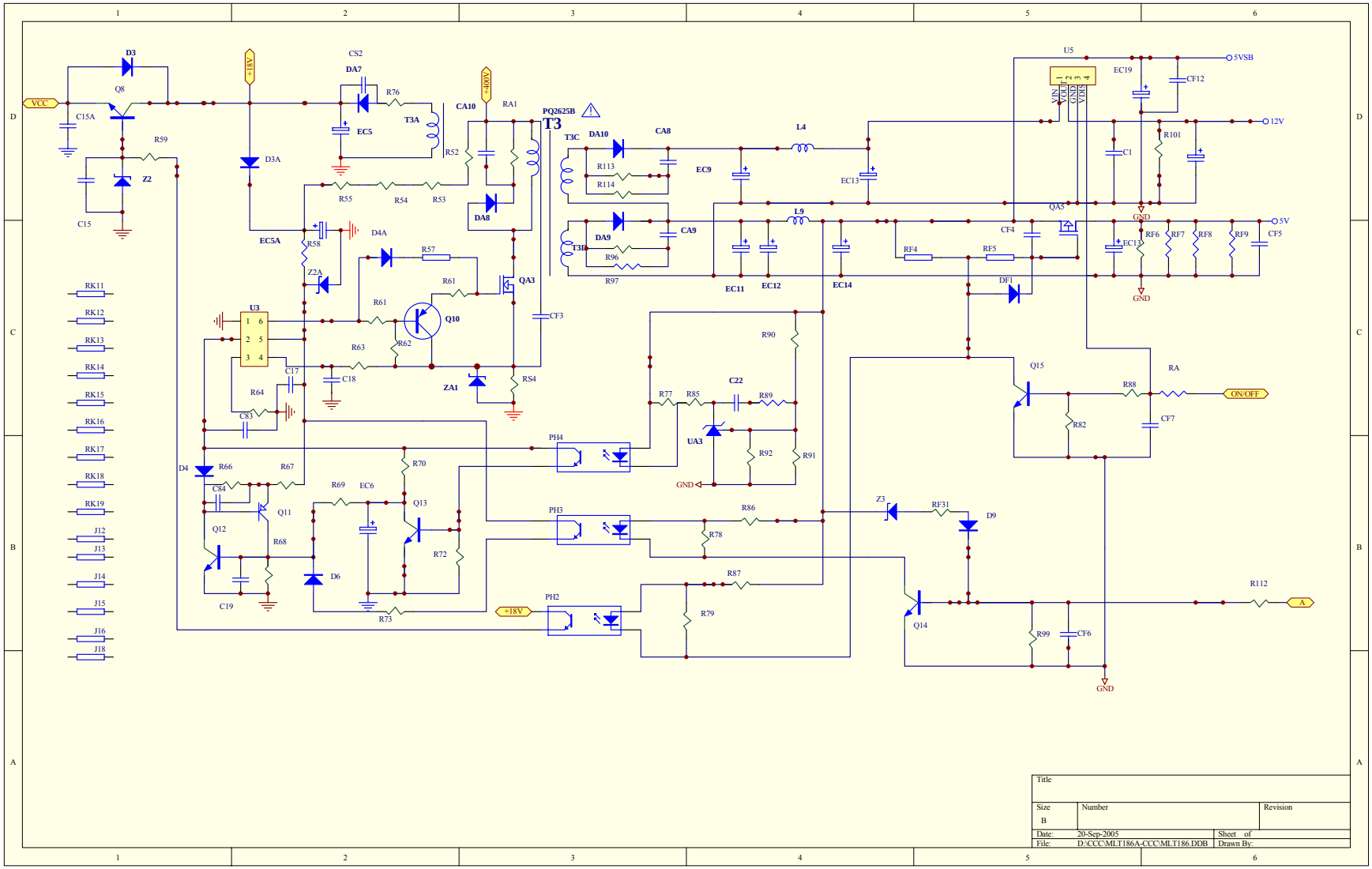
VCC
+18V
+300V
PQ2625B
T3
5VSB
12V
5V
GND
ON/OFF
+18V
Title
Size
B
Number
Revision
Date: 20-Sep-2005
Sheet of
File: D:\CCC\MLT186A-CCC\MLT186.DDB
Drawn By:

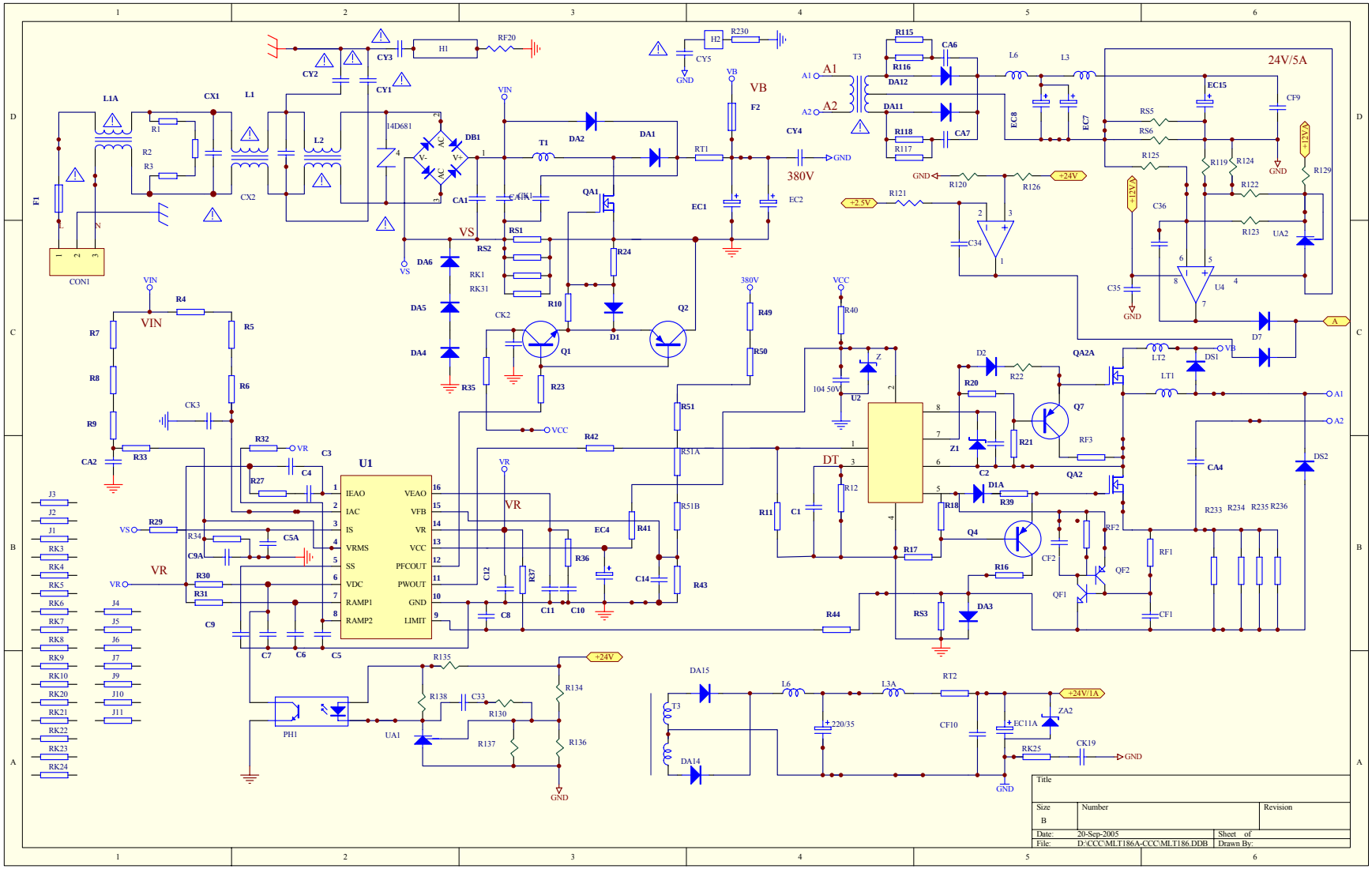
24V/5A
U1
IEAO
IAC
IS
VRMS
SS
VDC
RAMP1
RAMP2
VEAO
VFB
VR
VCC
PFCOUT
PWOUT
GND
LIMIT
Title
Size
B
Number
Revision
Date: 20-Sep-2005
Sheet of
File: D:\CCC\MLT186A-CCC\MLT186.DDB
Drawn By:

Basic Operations & Circuit Description

Main Electric Components

(1). MODULE:

There are 1 pc. panel and 2 pcs. PCB including 1 pc. INVERTER board(L), 1 pc. T-CONTROL board,

(2).SIGNAL PROCESS

There are 5 pcs. PCBs including

1 pc. Audio&Tuner board,
1 pc. Main digital board,
1 pc. Keypad board,
1 pc. Remote Control Receiver board,
1 pc. DVD decoder board

(3).POWER

There are 1 pc. PCB for power.

PCB function

1. Power:

(1). Input voltage: AC 100V~240V, 47Hz~63Hz.
Input range: AC 90V(Min)~264V(Max) auto regulation.
(2). To provide power for PCBs.
a). +24V for Inverter.
b). +5Vsb for standby,
c). +5V for signal power,
d). +24V for Audio Amp power and converter to
e). +12V for Tuner power.

2. Main (Video InterFace) board:

(1).Decoder the video signal (TV,CVBS,S-VIDEO) from analog to digital signal.
(2).Converter the Video signals(TV,CVBS,S-VIDEO) and graphics signal (VGA,YPbPr) from interface to progressive,
(3). Converter the Digital to fit the panel display mode and output the LVDS signal to Panel.

3. Tuner & Audio Board：

(1)Convert TV RF signal to video and audio signal to Main board.
(2). Decoder the TV SIF signal to audio signal,
(3). Converter the audio to audio Amplifier and output to the speaker.

4. KEYBOARD

To get the main button control on LCD_TV as SOURCE,MENU, CHANEL +,CHANEL -, VOL +,VOL-, STANDBY functions.

5. Remote control board

Receive the remote signal and active for the control.

6. T-CONTROL board

Converter the LVDS signal to the digital signal for fitting the PANEL.

7. INVERTER board

Converter the low DC voltage +24V to high AC voltage to drive the backlight.

PCB failure analysis

1. CONTROL:

a. Abnormal noise on screen.
b. No picture.

2. MAIN (VIDEO):

a. Lacking color, Bad color scale.
b. No voice.
c. No picture but with signals output, OSD and back light.
d. Abnormal noise on screen.

3. POWER:

No picture, no power output.

Basic operation of LCD-TV

1. After turning on power switch, power board sends 5Vst-by Volt to Micro Processor IC waiting for ON signals from Key Switch or Remote Receiver.

2. When the ON signal from Key Switch or Remote Receiver is detected, Micro Processor will send ON Control signals to Power. Then Power sends (5Vsc, 12Vsc, 24V and RLY ON, Vs ON) to PCBs working. This time VIF will send signals to display back light, OSD on the panel and start to search available signal sources. If the audio signals input, them will be amplified by Audio AMP and transmitted to Speakers.

3. If some abnormal signals are detected (for example: over volts, over current, over temperature and under volts), the system will be shut down by Power off.

LCD basic display theory.

When an electrical field is applied to the LC planes, the LC molecules re-align themselves so that they are parallel to the electrical field. This electrical process is known as **twisted nematic field effect** or **TNFE**. In this alignment, polarized light is not twisted as it passes through the LC material (see Diagram 3A and 3B). If the front polarizer is oriented perpendicular to the rear polarizer, light will pass through the energized display but will be blocked by the rear polarizer. An LCD in this form is acting as a light shutter.

Displays with variable characters are created by selectively etching away the conductive surface that was originally deposited on the glass. Etched areas become the display's background; unetched areas become the display's characters.

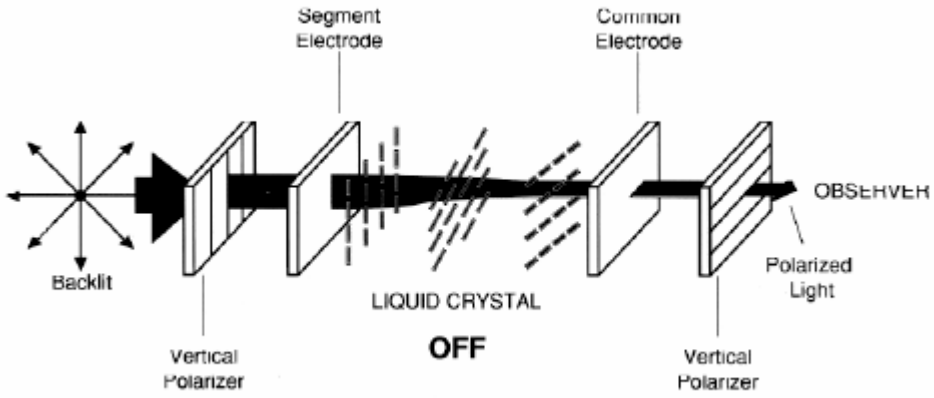

Diagram 3A. The "off" state of a TN LCD-the LC molecules form a twist and therefore cause polarized light to twist as it passes through.

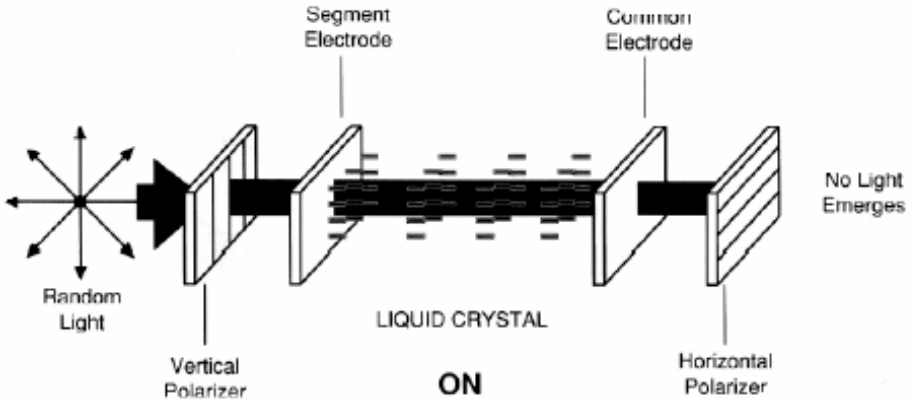

Diagram 3B. The "on" state-the electrical field re-aligns the LC molecules so they do not twist the polarized light.

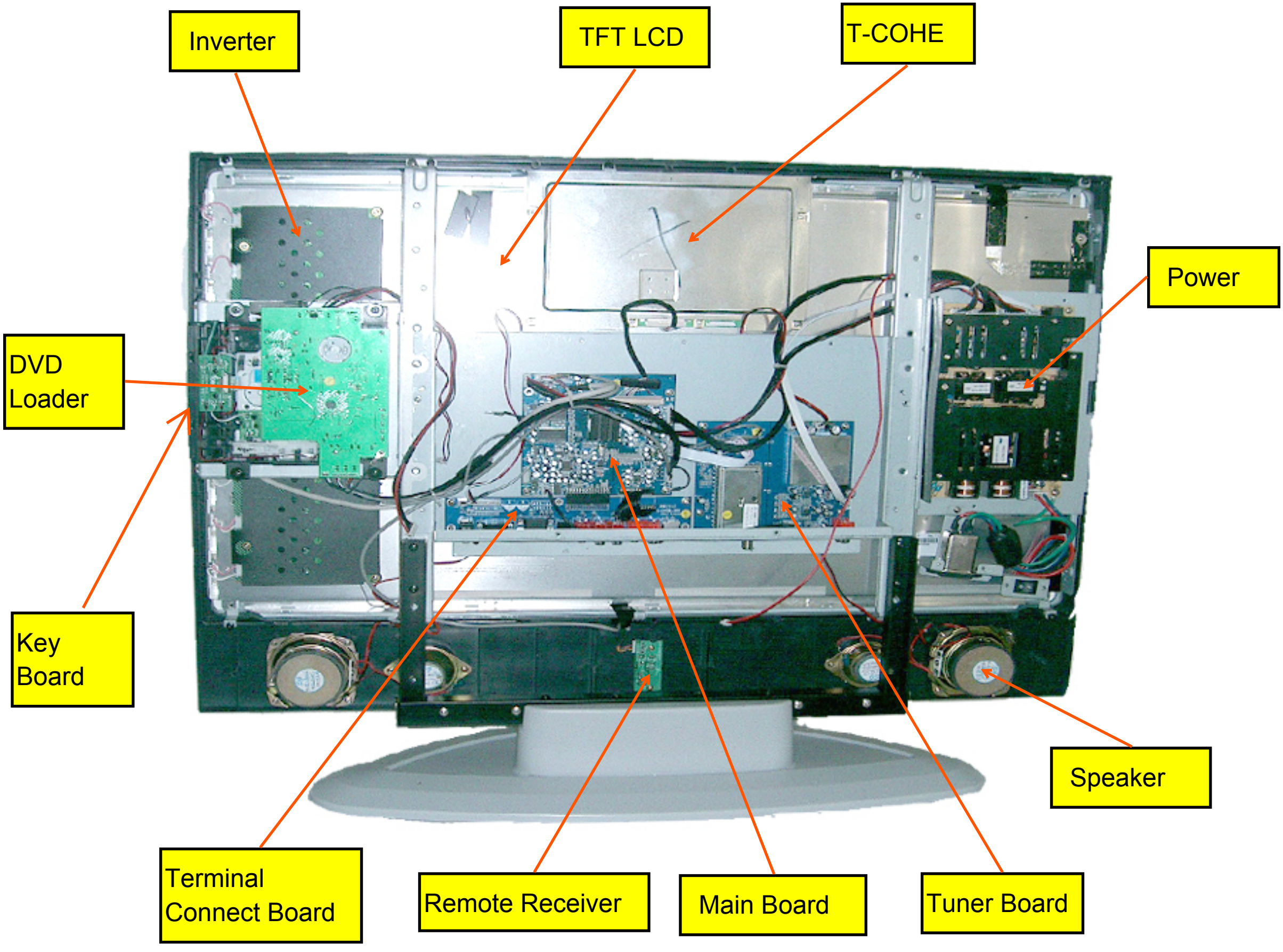
Inverter
TFT LCD
T-COHE
Power
DVD
Loader
Key
Board
Terminal
Connect Board
Remote Receiver
Main Board
Tuner Board
Speaker

IC DESCRIPTION

-MT8205G

-AT24C02

-MX29LV160BBTC

-LP2996

-AZ1117/H

-WM8776

-MX232A

-ISAV330

Pinout information

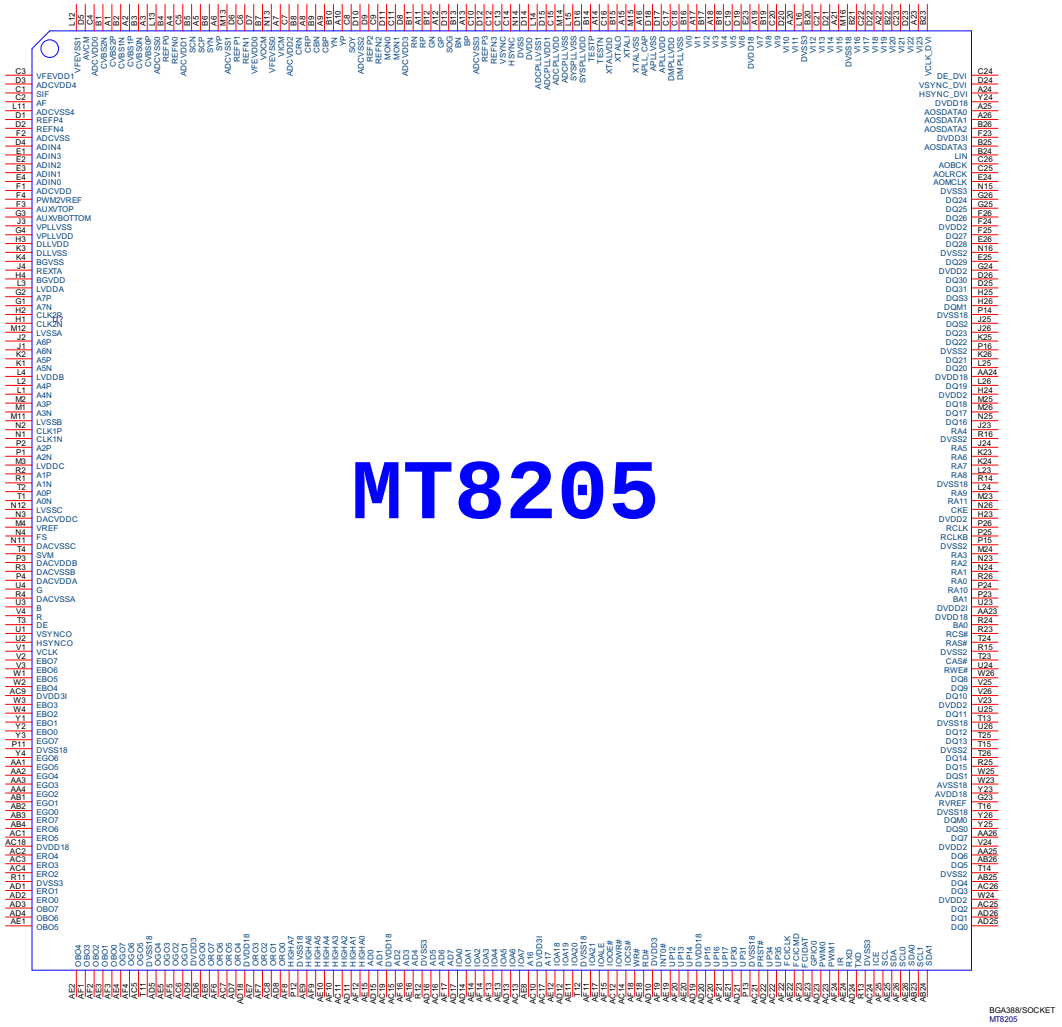

2.3 Pin Descriptions

Table 2-1 provides detail video/audio port pin descriptions.

Table 2-1 video/audio port pin descriptions.

Pin	Symbol	Type	Description
E24	AOMCLK	O	Audio out master clock
C25	AOLRCK	O	Audio out left-right clock
C26	AOBCK	O	Audio out bit clock
A25	AOSDATA0	O	Audio out data line 0
A26	AOSDATA1	O	Audio out data line 1
B26	AOSDATA2	O	Audio out data line 2
B25	AOSDATA3	O	Audio out data line 3
B24	LIN	I	Audio line in
A3	CVBS0P	I	Composite Video input 0
A2	CVBS1P	I	Composite Video input 1
A1	CVBS2P	I	Composite Video input 2
C1	SIF	I	Tuner Sound SIF
C2	AF	I	Tuner Sound AF

Features

- **Low Voltage and Standard Voltage Operation**
  - **5.0 (V_{CC} = 4.5V to 5.5V)**
  - **2.7 (V_{CC} = 2.7V to 5.5V)**
  - **2.5 (V_{CC} = 2.5V to 5.5V)**
  - **1.8 (V_{CC} = 1.8V to 5.5V)**
- **Internally Organized 128 x 8 (1K), 256 x 8 (2K), 512 x 8 (4K), 1024 x 8 (8K) or 2048 x 8 (16K)**
- **2-Wire Serial Interface**
- **Bidirectional Data Transfer Protocol**
- **100 kHz (1.8V, 2.5V, 2.7V) and 400 kHz (5V) Compatibility**
- **Write Protect Pin for Hardware Data Protection**
- **8-Byte Page (1K, 2K), 16-Byte Page (4K, 8K, 16K) Write Modes**
- **Partial Page Writes Are Allowed**
- **Self-Timed Write Cycle (10 ms max)**
- **High Reliability**
  - **Endurance: 1 Million Cycles**
  - **Data Retention: 100 Years**
- **Automotive Grade and Extended Temperature Devices Available**
- **8-Pin and 14-Pin JEDEC SOIC and 8-Pin PDIP Packages**

Description

The AT24C01A/02/04/08/16 provides 1024/2048/4096/8192/16384 bits of serial electrically erasable and programmable read only memory (EEPROM) organized as 128/256/512/1024/2048 words of 8 bits each. The device is optimized for use in many industrial and commercial applications where low power and low voltage operation are essential. The AT24C01A/02/04/08/16 is available in space saving 8-pin PDIP, 8-pin and 14-pin SOIC packages and is accessed via a 2-wire serial interface. In addition, the entire family is available in 5.0V (4.5V to 5.5V), 2.7V (2.7V to 5.5V), 2.5V (2.5V to 5.5V) and 1.8V (1.8V to 5.5V) versions.

2-Wire Serial CMOS E^2PROM

1K (128 x 8)

2K (256 x 8)

4K (512 x 8)

8K (1024 x 8)

16K (2048 x 8)

Pin Configurations

Pin Name	Function
A_0 to A_2	Address Inputs
SDA	Serial Data
SCL	Serial Clock Input
WP	Write Protect
NC	No Connect

8-Pin PDIP

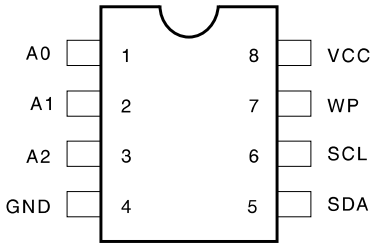

14-Pin SOIC

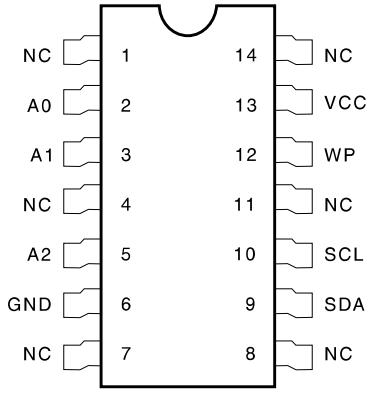

8-Pin SOIC

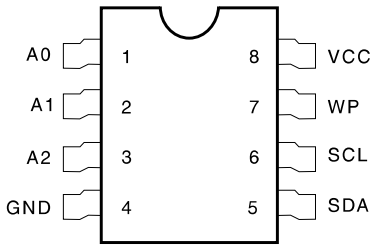

0180C

Absolute Maximum Ratings*

Operating Temperature	-55°C to +125°C
Storage Temperature	-65°C to +150°C
Voltage on Any Pin with Respect to Ground	-0.1V to +7.0V
Maximum Operating Voltage	6.25V
DC Output Current	5.0 mA

*NOTICE: Stresses beyond those listed under "Absolute Maximum Ratings" may cause permanent damage to the device. This is a stress rating only and functional operation of the device at these or any other conditions beyond those indicated in the operational sections of this specification is not implied. Exposure to absolute maximum rating conditions for extended periods may affect device reliability.

Block Diagram

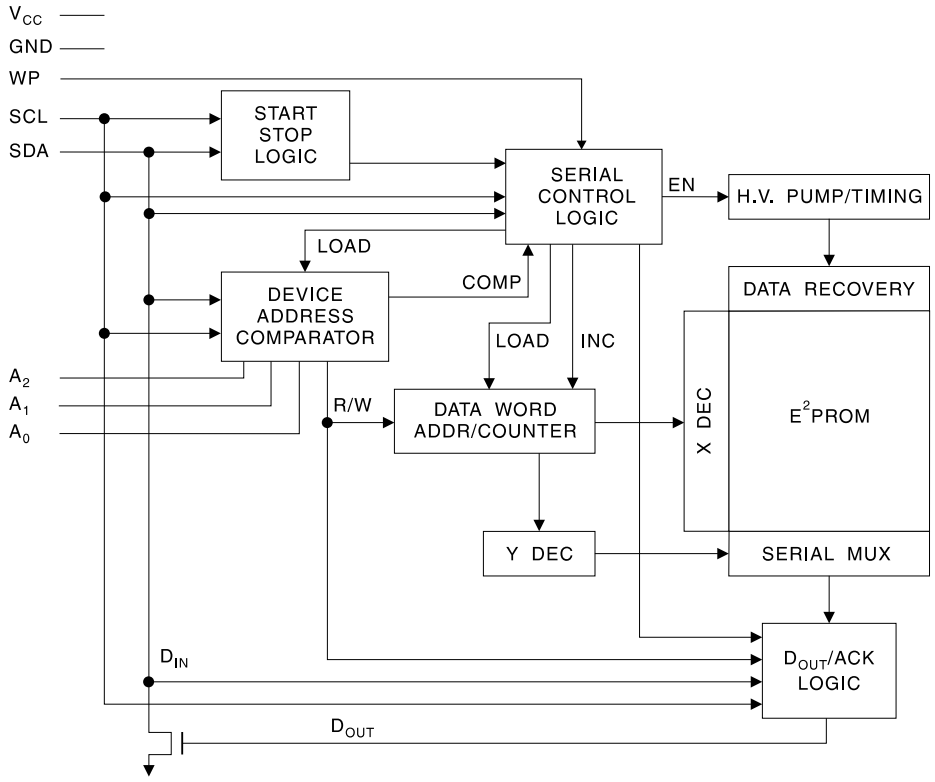

Pin Description

SERIAL CLOCK (SCL): The SCL input is used to positive edge clock data into each E^2PROM device and negative edge clock data out of each device.

SERIAL DATA (SDA): The SDA pin is bidirectional for serial data transfer. This pin is open-drain driven and may be wire-ORed with any number of other open-drain or open collector devices.

DEVICE/PAGE ADDRESSES (A2, A1, A0): The A2, A1 and A0 pins are device address inputs that are hard wired for the AT24C01A and the AT24C02. As many as eight 1K/2K devices may be addressed on a single bus system (device addressing is discussed in detail under the Device Addressing section).

The AT24C04 uses the A2 and A1 inputs for hard wire addressing and a total of four 4K devices may be addressed on a single bus system. The A0 pin is a no connect.

The AT24C08 only uses the A2 input for hardwire addressing and a total of two 8K devices may be addressed on a single bus system. The A0 and A1 pins are no connects.

The AT24C16 does not use the device address pins which limits the number of devices on a single bus to one. The A0, A1 and A2 pins are no connects.

(continued)

16M-BIT [2Mx8/1Mx16] CMOS SINGLE VOLTAGE 3V ONLY FLASH MEMORY

FEATURES

- Extended single - supply voltage range 2.7V to 3.6V
- 2,097,152 x 8/1,048,576 x 16 switchable
- Single power supply operation
  - 3.0V only operation for read, erase and program operation
- **Fully compatible with MX29LV160A device**
- Fast access time: 70/90ns
- Low power consumption
  - 30mA maximum active current
  - 0.2uA typical standby current
- Command register architecture
  - Byte/word Programming (9us/11us typical)
  - Sector Erase (Sector structure 16K-Bytex1, 8K-Bytex2, 32K-Bytex1, and 64K-Byte x31)
- Auto Erase (chip & sector) and Auto Program
  - Automatically erase any combination of sectors with Erase Suspend capability.
  - Automatically program and verify data at specified address
- Erase Suspend/Erase Resume
  - Suspends sector erase operation to read data from, or program data to, any sector that is not being erased, then resumes the erase.
- Status Reply
  - Data polling & Toggle bit for detection of program and erase operation completion.
- Ready/Busy pin (RY/BY)
  - Provides a hardware method of detecting program or erase operation completion.
- Sector protection
  - Hardware method to disable any combination of sectors from program or erase operations
  - Temporary sector unprotect allows code changes in previously locked sectors.
- CFI (Common Flash Interface) compliant
  - Flash device parameters stored on the device and provide the host system to access
- 100,000 minimum erase/program cycles
- Latch-up protected to 100mA from -1V to VCC+1V
- Boot Sector Architecture
  - T = Top Boot Sector
  - B = Bottom Boot Sector
- Low VCC write inhibit is equal to or less than 1.4V
- Package type:
  - 44-pin SOP
  - 48-pin TSOP
  - 48-ball CSP
- Compatibility with JEDEC standard
  - Pinout and software compatible with single-power supply Flash
- 10 years data retention

GENERAL DESCRIPTION

The MX29LV160BT/BB is a 16-mega bit Flash memory organized as 2M bytes of 8 bits or 1M words of 16 bits. MXIC's Flash memories offer the most cost-effective and reliable read/write non-volatile random access memory. The MX29LV160BT/BB is packaged in 44-pin SOP, 48-pin TSOP and 48-ball CSP. It is designed to be reprogrammed and erased in system or in standard EPROM programmers.

The standard MX29LV160BT/BB offers access time as fast as 70ns, allowing operation of high-speed microprocessors without wait states. To eliminate bus contention, the MX29LV160BT/BB has separate chip enable ($\overline{CE}$) and output enable ($\overline{OE}$) controls.

MXIC's Flash memories augment EPROM functionality with in-circuit electrical erasure and programming. The MX29LV160BT/BB uses a command register to manage this functionality. The command register allows for 100% TTL level control inputs and fixed power supply levels during erase and programming, while maintaining maximum EPROM compatibility.

MXIC Flash technology reliably stores memory contents even after 100,000 erase and program cycles. The MXIC cell is designed to optimize the erase and programming mechanisms. In addition, the combination of advanced tunnel oxide processing and low internal electric fields for erase and program operations produces reliable cycling. The MX29LV160BT/BB uses a 2.7V~3.6V VCC supply to perform the High Reliability Erase and auto Program/Erase algorithms.

The highest degree of latch-up protection is achieved with MXIC's proprietary non-epi process. Latch-up protection is proved for stresses up to 100 milliamps on address and data pin from -1V to VCC + 1V.

National Semiconductor

November 2003

LP2996
DDR Termination Regulator

General Description

The LP2996 linear regulator is designed to meet the JEDEC SSTL-2 specifications for termination of DDR-SDRAM. The device contains a high-speed operational amplifier to provide excellent response to load transients. The output stage prevents shoot through while delivering 1.5A continuous current and transient peaks up to 3A in the application as required for DDR-SDRAM termination. The LP2996 also incorporates a V_{SENSE} pin to provide superior load regulation and a V_{REF} output as a reference for the chipset and DIMMs.

An additional feature found on the LP2996 is an active low shutdown ($\overline{SD}$) pin that provides Suspend To RAM (STR) functionality. When $\overline{SD}$ is pulled low the V_{TT} output will tri-state providing a high impedance output, but, V_{REF} will remain active. A power savings advantage can be obtained in this mode through lower quiescent current.

Features

- Source and sink current
- Low output voltage offset
- No external resistors required
- Linear topology
- Suspend to Ram (STR) functionality
- Low external component count
- Thermal Shutdown
- Available in SO-8, PSOP-8 or LLP-16 packages

Applications

- DDR-I and DDR-II Termination Voltage
- SSTL-2 and SSTL-3 Termination
- HSTL Termination

Typical Application Circuit

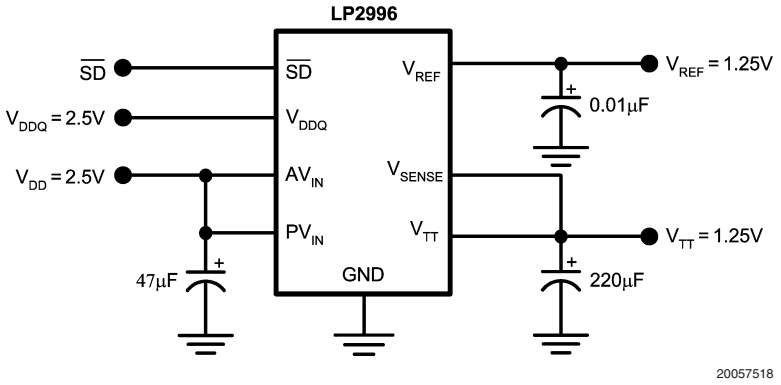

- **Low Differential Gain and Phase (D_G = 0.64%, D_P = 0.1 Degrees Typ)**
- **Wide Bandwidth (BW = 300 MHz Min)**
- **Low Crosstalk (X_{TALK} = −63 dB Typ)**
- **Low Power Consumption (I_{CC} = 3 μA Max)**
- **Bidirectional Data Flow, With Near-Zero Propagation Delay**
- **Low ON-State Resistance (r_{on} = 3 Ω Typ)**
- **V_{CC} Operating Range From 4.5 V to 5.5 V**
- **I_{off} Supports Partial-Power-Down Mode Operation**
- **Data and Control Inputs Provide Undershoot Clamp Diode**
- **Control Inputs Can Be Driven by TTL or 5-V/3.3-V CMOS Outputs**
- **Latch-Up Performance Exceeds 100 mA Per JESD 78, Class II**
- **ESD Performance Tested Per JESD 22**
  - **2000-V Human-Body Model (A114-B, Class II)**
  - **1000-V Charged-Device Model (C101)**
- **Suitable for Both RGB and Composite-Video Switching**

D, DBQ, OR PW PACKAGE
(TOP VIEW)

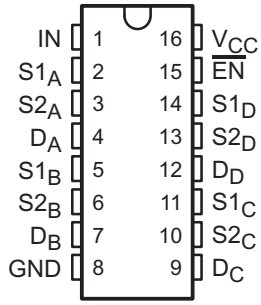

RGY PACKAGE
(TOP VIEW)

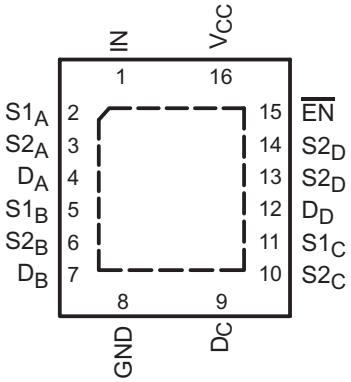

description/ordering information

The TI TS5V330 video switch is a 4-bit 1-of-2 multiplexer/demultiplexer with a single switch-enable ($\overline{EN}$) input. When $\overline{EN}$ is low, the switch is enabled and the D port is connected to the S port. When $\overline{EN}$ is high, the switch is disabled and the high-impedance state exists between the D and S ports. The select (IN) input controls the data path of the multiplexer/demultiplexer.

ORDERING INFORMATION

T_A	PACKAGE†		ORDERABLE PART NUMBER	TOP-SIDE MARKING
−40°C to 85°C	QFN − RGY	Tape and reel	TS5V330RGYR	TE330
	SOIC − D	Tube	TS5V330D	TS5V330
		Tape and reel	TS5V330DR	
	SSOP (QSOP) − DBQ	Tape and reel	TS5V330DBQR	TE330
	TSSOP − PW	Tube	TS5V330PW	TE330
		Tape and reel	TS5V330PWR	

† Package drawings, standard packing quantities, thermal data, symbolization, and PCB design guidelines are available at www.ti.com/sc/package.

Please be aware that an important notice concerning availability, standard warranty, and use in critical applications of Texas Instruments semiconductor products and disclaimers thereto appears at the end of this data sheet.

PRODUCTION DATA information is current as of publication date. Products conform to specifications per the terms of Texas Instruments standard warranty. Production processing does not necessarily include testing of all parameters.

Copyright © 2004, Texas Instruments Incorporated

24-bit, 192kHz Stereo CODEC with 5 Channel I/P Multiplexer

DESCRIPTION

The WM8776 is a high performance, stereo audio CODEC with five channel input selector. The WM8776 is ideal for surround sound processing applications for home hi-fi, DVD-RW and other audio visual equipment.

A stereo 24-bit multi-bit sigma delta ADC is used with a five stereo channel input mixer. Each ADC channel has programmable gain control with automatic level control. Digital audio output word lengths from 16-32 bits and sampling rates from 32kHz to 96kHz are supported.

A stereo 24-bit multi-bit sigma delta DAC is used with digital audio input word lengths from 16-32 bits and sampling rates from 32kHz to 192kHz. The DAC has an input mixer allowing an external analogue signal to be mixed with the DAC signal. There are also Headphone and line outputs, with volume controls for the headphones.

The WM8776 supports fully independent sample rates for the ADC and DAC. The audio data interface supports I^2S, left justified, right justified and DSP formats.

The device is controlled in software via a 2 or 3 wire serial interface, selected by the MODE pin, which provides access to all features including channel selection, volume controls, mutes, and de-emphasis facilities.

The device is available in a 48-pin TQFP package.

FEATURES

- Audio Performance
  - 108dB SNR ('A' weighted @ 48kHz) DAC
  - 102dB SNR ('A' weighted @ 48kHz) ADC
- DAC Sampling Frequency: 32kHz – 192kHz
- ADC Sampling Frequency: 32kHz – 96kHz
- Five stereo ADC inputs with analogue gain adjust from +24dB to –21dB in 0.5dB steps
- Programmable Limiter or Automatic Level Control (ALC)
- Stereo DAC with independent analogue and digital volume controls
- Stereo Headphone and Line Output
- 3-Wire SPI Compatible or 2-Wire Software Serial Control Interface
- Master or Slave Clocking Mode
- Programmable Audio Data Interface Modes
  - I^2S, Left, Right Justified or DSP
  - 16/20/24/32 bit Word Lengths
- Analogue Bypass Path Feature
- Selectable AUX input to the volume controls
- 2.7V to 5.5V Analogue, 2.7V to 3.6V Digital supply Operation

APPLICATIONS

- Surround Sound AV Processors and Hi-Fi systems
- DVD-RW

BLOCK DIAGRAM

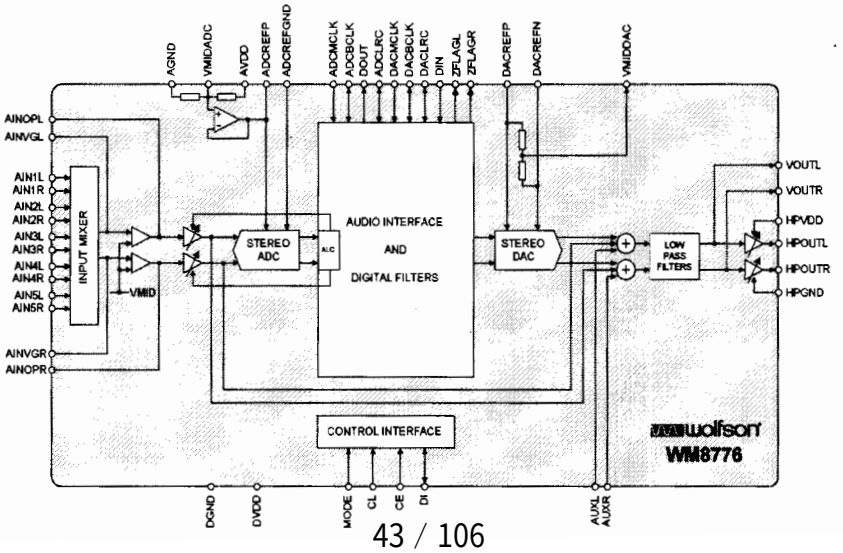

19-0175; Rev 3; 5/96

MAXIM

±15kV ESD-Protected, +5V RS-232 Transceivers

General Description

The MAX202E–MAX213E, MAX232E/MAX241E line drivers/receivers are designed for RS-232 and V.28 communications in harsh environments. Each transmitter output and receiver input is protected against ±15kV electrostatic discharge (ESD) shocks, without latchup. The various combinations of features are outlined in the *Selection Guide.* The drivers and receivers for all ten devices meet all EIA/TIA-232E and CCITT V.28 specifications at data rates up to 120kbps, when loaded in accordance with the EIA/TIA-232E specification.

The MAX211E/MAX213E/MAX241E are available in 28-pin SO packages, as well as a 28-pin SSOP that uses 60% less board space. The MAX202E/MAX232E come in 16-pin narrow SO, wide SO, and DIP packages. The MAX203E comes in a 20-pin DIP/SO package, and needs no external charge-pump capacitors. The MAX205E comes in a 24-pin wide DIP package, and also eliminates external charge-pump capacitors. The MAX206E/MAX207E/MAX208E come in 24-pin SO, SSOP, and narrow DIP packages. The MAX232E/MAX241E operate with four 1µF capacitors, while the MAX202E/MAX206E/MAX207E/MAX208E/MAX211E/MAX213E operate with four 0.1µF capacitors, further reducing cost and board space.

Applications

Notebook, Subnotebook, and Palmtop Computers
Battery-Powered Equipment
Hand-Held Equipment

Ordering Information appears at end of data sheet.

Features

- ♦ **ESD Protection for RS-232 I/O Pins:**
  ±15kV—Human Body Model
  ±8kV—IEC1000-4-2, Contact Discharge
  ±15kV—IEC1000-4-2, Air-Gap Discharge
- ♦ **Latchup Free (unlike bipolar equivalents)**
- ♦ **Guaranteed 120kbps Data Rate—LapLink™ Compatible**
- ♦ **Guaranteed 3V/µs Min Slew Rate**
- ♦ **Operate from a Single +5V Power Supply**

Pin Configurations

TOP VIEW

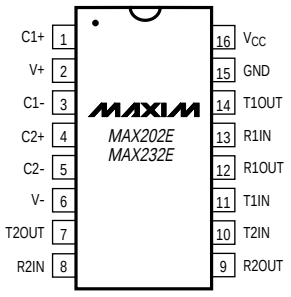

DIP/SO

Pin Configurations and Typical Operating Circuits continued at end of data sheet.

Selection Guide

PART	No. of RS-232 DRIVERS	No. of RS-232 RECEIVERS	RECEIVERS ACTIVE IN SHUTDOWN	No. of EXTERNAL CAPACITORS	LOW-POWER SHUTDOWN	TTL THREE-STATE
MAX202E	2	2	0	4 (0.1µF)	No	No
MAX203E	2	2	0	None	No	No
MAX205E	5	5	0	None	Yes	Yes
MAX206E	4	3	0	4 (0.1µF)	Yes	Yes
MAX207E	5	3	0	4 (0.1µF)	No	No
MAX208E	4	4	0	4 (0.1µF)	No	No
MAX211E	4	5	0	4 (0.1µF)	Yes	Yes
MAX213E	4	5	2	4 (0.1µF)	Yes	Yes
MAX232E	2	2	0	4 (1µF)	No	No
MAX241E	4	5	0	4 (1µF)	Yes	Yes

LapLink is a registered trademark of Traveling Software, Inc.

For free samples & the latest literature: http://www.maxim-ic.com, or phone 1-800-998-8800

Table 3. DB9 Cable Connections Commonly Used for EIA/TIAE-232E and V.24 Asynchronous Interfaces

PIN	CONNECTION	
1	Received Line Signal Detector (sometimes called Carrier Detect, DCD)	Handshake from DCE
2	Receive Data (RD)	Data from DCE
3	Transmit Data (TD)	Data from DTE
4	Data Terminal Ready	Handshake from DTE
5	Signal Ground	Reference point for signals
6	Data Set Ready (DSR)	Handshake from DCE
7	Request to Send (RTS)	Handshake from DTE
8	Clear to Send (CTS)	Handshake from DCE
9	Ring Indicator	Handshake from DCE

Pin Configurations and Typical Operating Circuits (continued)

TOP VIEW

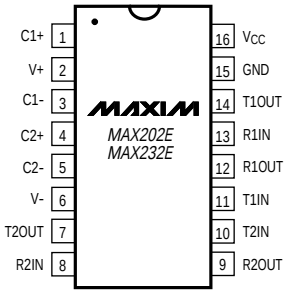

DIP/SO

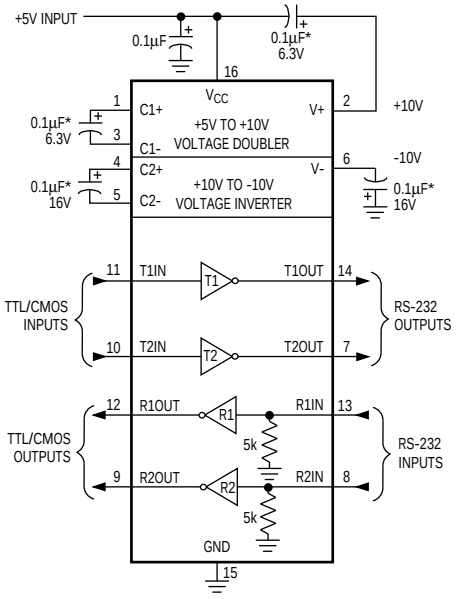

PIN NUMBERS ON TYPICAL OPERATING CIRCUIT REFER TO DIP/SO PACKAGE, NOT LCC.
* 1.0µF CAPACITORS, MAX232E ONLY.

MAXIM

SPECIFICATION FOR APPROVAL

Part No. MLT186A

Description: LCD Power Supply Specification

Revision: 1.0

Customer. SANSUI ELECTRIC

Customer Approval No. :

Please return to us one original of **"SPECIFICATION FOR APPROVAL" w**ith your approved signatures.

APPROVED SIGNATURES
APPROVED BY: DATE: CHOP & SIGNATURES:

SHENZHEN MEGMEET ELECTRICAL TECHNOLOGY CO.,LTD

Add: 6F Tower 2, Zhongjian Industrial Building
18 Yanshan Road , Shekou, Shenzhen, P.R.China
ZIP CODE:518067

TEL: (0755)26693042 26693442

FAX: (0755)26693047

E-mail: YDP@megmeet.com

Spec. Rev.	Sample Rev.	Date	Description	Safety by	Mechanical by	Electrical by
1.0	1.0	2005. 09. 12		Zhangzhi	Qiu	Tony Yang

MEGMEET

MEGMEET MEGMEET ELECTRICAL TECHNOLOGY CO., LTD.				DESCRIPTION: SPECIFICATION	
THESE SPECIFICATION ARE THE PROPERTY OF MEGMEET ELECTRICAL TECHNOLOGY CO., LTD AND SHALL NOT BE REPRODUCED OR USED AS THE BASIS FOR THE MANUFACTURE OR SELL OF APPARATUSES OR DEVICES WITHOUT PERMISSION.				Model No.: MLT186	
DATE	PREPARED	CHECKED	APPROVED	Document No.:	REV:
09-12-2005	QIU	ZHANGZHI	TONY YANG	MLT186-1.0	1.0

Section

1. Power supply overview

1.1 Input Electrical Characteristics Overview

1.2 Output Electrical Characteristics Overview

1.2.1 Output Voltage ,Current & Regulation.

1.2.2 DC Output Ripple & Noise.

1.2.3 Output Transient Response.

1.2.4 DC Output Hold-Up Time.

1.2.4 DC Output Overshoot At Turn On & Turn Off.

1.2.6 DC output voltage rise time

1.3 Remote On/Off Control：

1.4 Protection:

1.4.1 DC output Over Voltage Protection.

1.4.2 DC Output Over current Protection.

1.4.3 DC Output Short Circuit Protection.

1.4.4 Over Temperature Protection.

1.4.5 Reset After Shutdown.

2. Isolation

3. Safety

4. EMC

4.1 EMI

4.2 EMS

5. Environmental Requirement

5.1 Temperature

5.2 Humidity

5.3 Altitude

5.4 Cooling Method

5.5 Vibration

5.6 Impact

6. Dimension

7. Weight

8. Pin Connection

MEGMEET MEGMEET ELECTRICAL TECHNOLOGY CO., LTD.				DESCRIPTION: **SPECIFICATION**	
THESE SPECIFICATION ARE THE PROPERTY OF MEGMEET ELECTRICAL TECHNOLOGY CO., LTD AND SHALL NOT BE REPRODUCED OR USED AS THE BASIS FOR THE MANUFACTURE OR SELL OF APPARATUSES OR DEVICES WITHOUT PERMISSION.				Model No.: MLT186	
DATE	PREPARED	CHECKED	APPROVED	Document No.:	REV:
09-12-2005	QIU	ZHANGZHI	TONY YANG	MLT186-1.0	1.0

Spec. Rev.	Sample Rev.	Date	Description	Safety by	Mechanical by	Electrical by
1.0	1.0	2005. 09. 12		Zhangzhi	Qiu	Tony Yang

MEGMEET

MEGMEET MEGMEET ELECTRICAL TECHNOLOGY CO., LTD.				DESCRIPTION: SPECIFICATION	
THESE SPECIFICATION ARE THE PROPERTY OF MEGMEET ELECTRICAL TECHNOLOGY CO., LTD AND SHALL NOT BE REPRODUCED OR USED AS THE BASIS FOR THE MANUFACTURE OR SELL OF APPARATUSES OR DEVICES WITHOUT PERMISSION.				Model No.: MLT186	
DATE	PREPARED	CHECKED	APPROVED	Document No.: MLT186-1.0	REV: 1.0
09-12-2005	QIU	ZHANGZHI	TONY YANG		

2) Outputs shall be bypassed at the connector with a 0.1uF ceramic capacitor and a 10uF electrolytic capacitor to simulate system loading.

1.2.3 Output Transient Response.

Table 4. Test condition.

Voltage Tolerance Limit	Slew Rate	Load Change
V1/V3±5% +V2 ±10% +5V±5% +5.1VSB±5%	0.2A/uS	Min. to 50% load and 50% to Max load
all outputs ±10%	0.2A/uS	Min. load to Max load

Note: Transient response measurements shall be made with a load changing repetition rate of 50Hz to 10kHz.

1.2.4 Table 5 DC Output Hold-Up Time.

Output Voltage	120Vac input	220Vac input
+V1/+V2(+24V)	≥10 mS	≥10 mS
+V3(+12V)	≥10 mS	≥10 mS
+5V/+5.1VSB	≥10 mS	≥10 mS

Note: All of dc output at full load.

1.2.5 Table 6 DC Output Overshoot At Turn On & Turn Off.

Output Channel	Output(V)	Over shoot voltage(V)	
		Turn on	Turn off
+V1	+24V	2%	2%
+V2	+24V	5%	5%
+V3	+ 12V	2%	2%
+5V	+5V	5%	5%
+5.1VSB	+5. 1V	5%	5%

Note: All of dc output current from Min. to Max.

1.2.6 Table 7 DC output voltage rise time

Output Voltage	120Vac input &Full Load	220Vac input &Full Load
+V1/+V2(+24V)	≤100 mS	≤100 mS

+V3(+12V)	≤100 mS	≤100 mS
+5V	≤100 mS	≤100 mS
+5.1VSB	≤100 mS	≤100 mS
Note: The output voltages shall rise from10% to 90% of their output voltage.		

1.3 Remote On/Off Control:

The power supply DC outputs (without +5.1Vsb) shall be enable with an active-high TTL(≥2.0V/2.0mA)-compatible signal(Ps-on). The +5.1Vsb is on whenever the AC power is present.

* When Ps-on is pulled to TTL high, the DC outputs are to be enabled.

* When Ps-on is pulled to TTL low or open circuit, the DC outputs are to be disabled.

Table 8.

Ps-on Signal	Comments	Outputs
Ps-on- high	≥2.5V&2.0mA (source)	Enable
Ps-on- low	≤1.5 V	X
Ps-on-open	--	X

1.4 Protection:

1.4.1 Table 9 DC output Over Voltage Protection.

Output Voltage	Max. Over Voltage	Comments
+V1(+24V)	28V	Power supply latch into shutdown state
+5.0V	7Vtyp	Hiccup
Note: The power supply shall be test at max AC voltage (270Vac) and min load or no load.		

1.4.2 Table 10 DC Output Over current Protection.

Output Voltage	Over Current	Comments

+V1(+24V)	≥7Atyp	Shutdown
+V2(+24V)	≥2Atyp	Shutdown
+V3(+12V)	≥3A	Shutdown
+5V/+5.1VSB	≥9A type	Hiccup

1.4.3 Table 11 DC Output Short Circuit Protection.

Output Voltage	Comments
+V1(+24V)	Shutdown
+V2(+24V)	Shutdown
+V3(+12V)	Shutdown
+5V/5.1VSB	Hiccup

1.4.4 Reset After Shutdown.

Recycle the ps-on signal, the power supply will restart after the fault removed.

2. Isolation

2.1 Table 12

Input To Output	DC500V 50MΩmin (at room temperature)
Input To FG	DC500V 50MΩmin (at room temperature)
Output To FG	Non Isolated

2.2 Table 13

Input To Output	3000Vac 50Hz 1minute ≤10mA
Input To FG	1500Vac 50Hz 1minute ≤10mA
Output To FG	Non Isolated

Note: Open FG and Output return.

3. Safety

The power supply shall compliance with the following Criterion:

1) UL60950
2) EN60950
3) GB4943-1995/GB8898-2001

4. EMC

4.1 EMI

The power supply shall compliance with the following Criterion:

1) Conduction Emission :
   *EN55013, CLASS B
   *GB13837-2003, CLASS B
   *CISPR13:2001
2) Radiated Emission :
   *EN55013, CLASS B
   *GB13837-2003, CLASS B
   *CISPR13:2001

4.2 EMS

The power supply shall compliance with the following Criterion:

1) ESD
   *GB17626.2-1998/IEC61000-4-2 Lever 3
2) EFT
   *GB17626.4-1998/IEC61000-4-4 Lever 3
3) SURGE
   *GB17626.5-1998/IEC61000-4-5 Lever 3
4) DIP
   *GB17626.11-1998/IEC61000-4-11 Class B/C

5. Environmental Requirement

5.1 Temperature

* Operating: -10℃ to +50℃.
* Store: -20℃ to +80℃.

5.2 Humidity

* Operating: From 10%to90% relative humidity (non-condensing).
* Store: From 5 to 95% relative humidity (non-condensing).

5.3 Altitude

* Operating: to10,000 ft.
* Store: to 20,000ft.

5.4 Cooling Method

* Ventilation cooling .

5.5 Vibration

* 10-55Hz, 49.0m/s² (5G), 3minutes period, 20minutes each along X, Y and Z axis.

5.6 Impact

* 196.1m/s² (20G),11ms, once each X, Y and Z axis.

6. Dimension

* 200mm X 130mm X 25mm (L *W * H).

7. Weight

* 680g

8. Pin Connection

Table 15 CN3 VENTER:

NO.	Pin Connection	Function
1	+24VAUDIO	+24VDC OUTPUT
2	+24VAUDIO	+24VDC OUTPUT
3	GND	+24VDC RETURN
4	GND	+24VDC RETURN

Note: CN3 -- JST VA CONNEETION, TYPE : pitch:2.0mm

Table 16 CN2 VENTER:

NO.	Pin Connection	Function
1	+24V	+24VDC OUTPUT
2	+24V	+24VDC OUTPUT
3	+24V	+24VDC OUTPUT
4	+24V	+24VDC OUTPUT
5	GND	+24VDC RETURN
6	GND	+24VDC RETURN
7	GND	+24VDC RETURN
8	GND	+24VDC RETURN

Note: CN2 -- JST VA CONNEETION, TYPE : pitch:2.54mm

Table 17 CN1 VENTER:

NO.	Pin Connection	Function
1	+12V	+12DC OUTPUT
2	+12V	+12DC OUTPUT
3	+12V	+12DC OUTPUT
4	GND	+12V/+5VDC RETURN
5	GND	+12V/+5VDC RETURN

6	GND	+12V/+5VDC RETURN
7	+5V	+5DC OUTPUT
8	+5V	+5DC OUTPUT
9	+5V	+5DC OUTPUT
10	+5V	+5DC OUTPUT
11	+5V	+5DC OUTPUT

Note: CN2 -- JST VA CONNEETION, TYPE : pitch:2.0mm

Table 15 CN4 VENTER:

NO.	Pin Connection	Function
1	+5VSB	+5VSB OUTPUT
2	+5VSB	+5VSB OUTPUT
3	GND	+5VSB RETURN
4	GND	+5VSB RETURN
5	PS-ON	PS-ON

Note: CN3 -- JST VA CONNEETION, TYPE : pitch:2.0mm

Table 18 CON1 VENTER:

NO.	Pin Connection	Function
①	AC-L	AC INPUT LINE
②	NC	NC
③	AC-N	AC INPUT NUTURE

Note: CN3 -- JST VA CONNEETION, TYPE : pitch:3.96mm

Fig.8.1 Pin Connection (Top View)

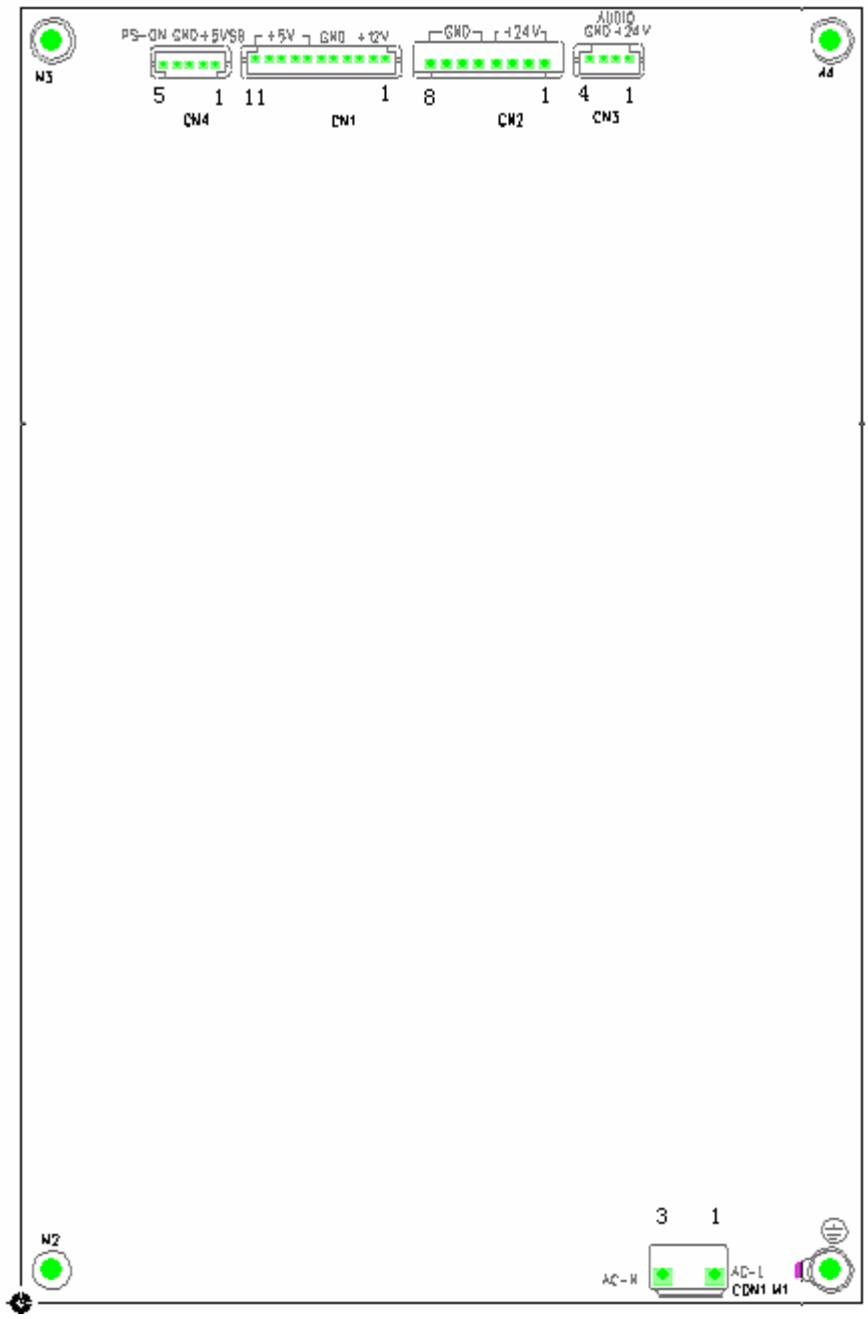

MEGMEET MEGMEET ELECTRICAL TECHNOLOGY CO., LTD.				DESCRIPTION: **SPECIFICATION**	
THESE SPECIFICATION ARE THE PROPERTY OF MEGMEET ELECTRICAL TECHNOLOGY CO., LTD AND SHALL NOT BE REPRODUCED OR USED AS THE BASIS FOR THE MANUFACTURE OR SELL OF APPARATUSES OR DEVICES WITHOUT PERMISSION.				Model No.: MLT186	
DATE	PREPARED	CHECKED	APPROVED	Document No.:	REV:
09-12-2005	QIU	ZHANGZHI	TONY YANG	MLT186-1.0	1.0

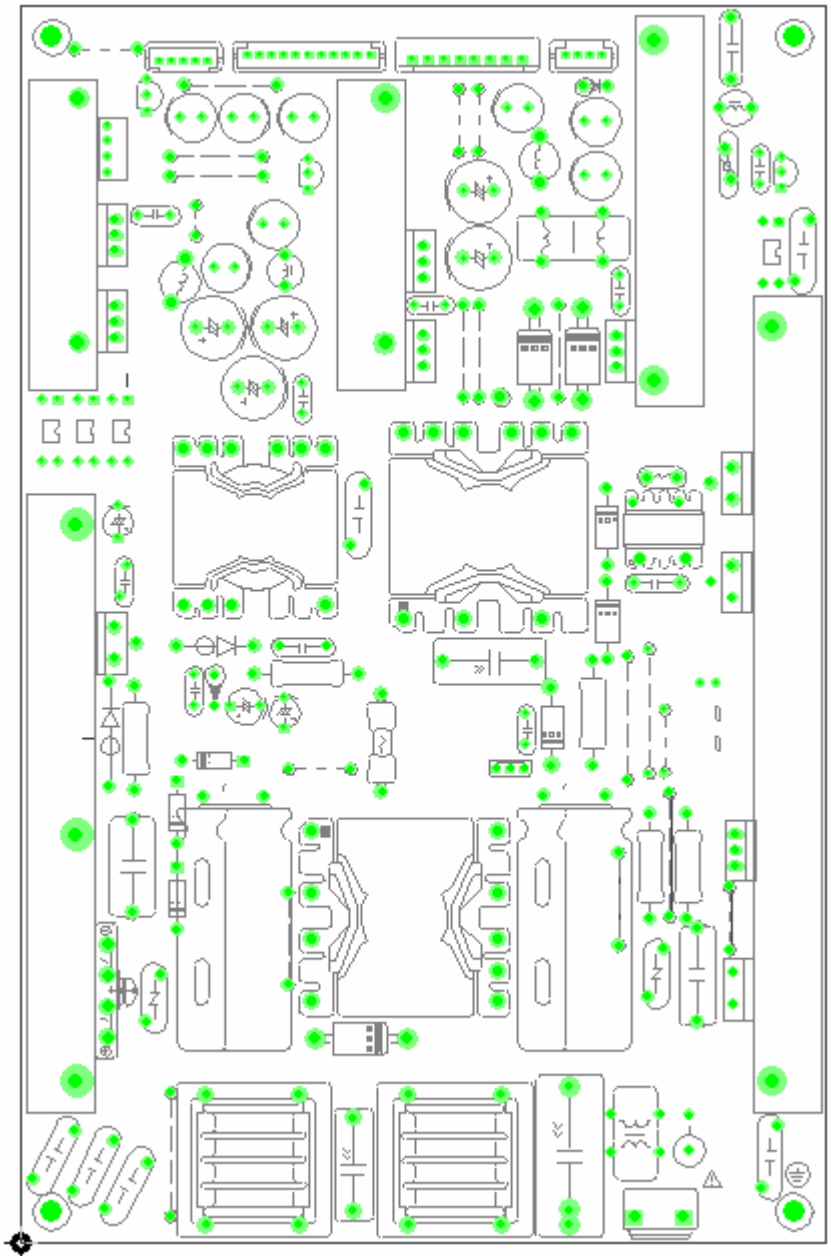

MEGMEET MEGMEET ELECTRICAL TECHNOLOGY CO., LTD.				DESCRIPTION: **SPECIFICATION**	
THESE SPECIFICATION ARE THE PROPERTY OF MEGMEET ELECTRICAL TECHNOLOGY CO., LTD AND SHALL NOT BE REPRODUCED OR USED AS THE BASIS FOR THE MANUFACTURE OR SELL OF APPARATUSES OR DEVICES WITHOUT PERMISSION.				Model No.: MLT186	
DATE	PREPARED	CHECKED	APPROVED	Document No.:	REV:
09-12-2005	QIU	ZHANGZHI	TONY YANG	MLT186-1.0	1.0

9. Power Supply Mounting

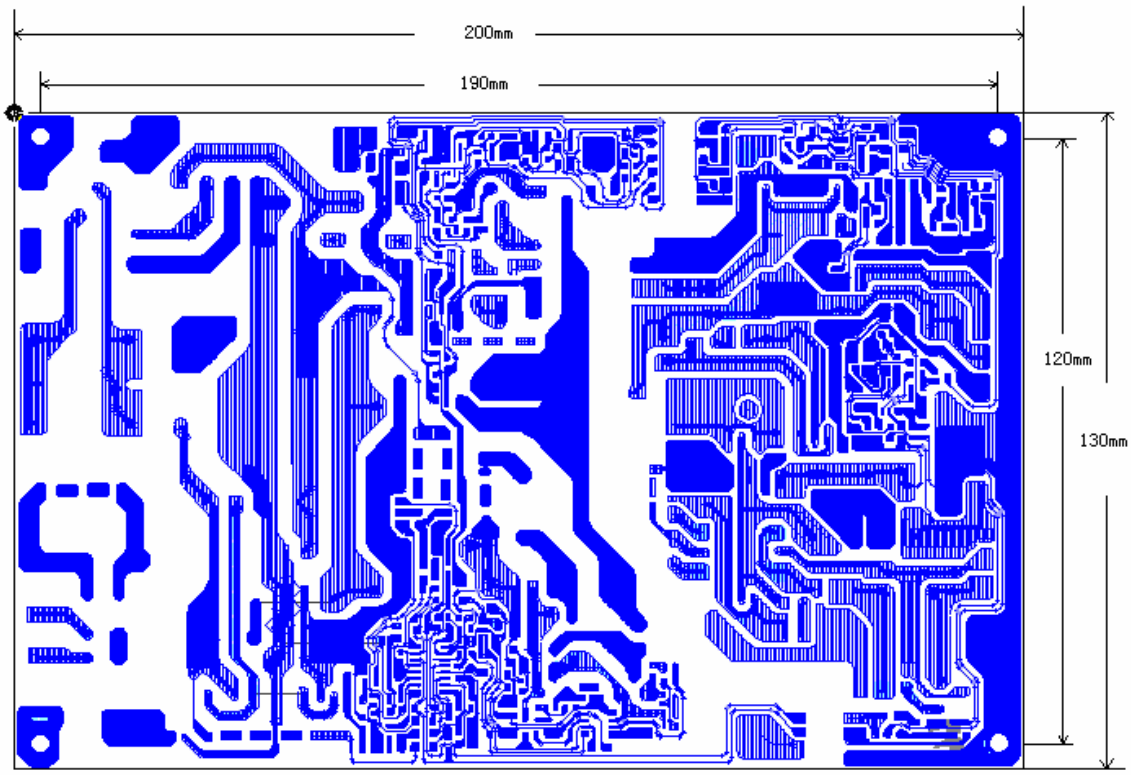

SPECIFICATION

CUSTOMER：

DESCRIPTION： Slot-in DVD LOADER

MODEL： DL-06 series(DL-06**)

ISSUE DATE： 2005.11.02

CUSTOMER APPROVED

Approved	Checked by Sales Dept.	Checked by Technical Dept.	Prepared

FORYOU 惠州市华阳多媒体电子有限公司 HUIZHOU FORYOU MULTIMEDIA ELECTRONICS CO., LTD.

1. Scope

1.1 This specification applies to Slot-in DVD mechanism for DVD player (thereafter called DVD mechanism). Foryou model : DL-06**.

1.2 Any query over the specification shall be expressed by R&D dept. of Foryou Multimedia Electronics Co.,Ltd.

1.3 For improving performance purpose, this specification is subject to change according to pre-agreement established between us.

1.4 Hardware and software or manufacturing process may subject to change for improvements within the rang of the specifications.

2. Dimension of shell and installation

2.1 See attachment for details of dimension of shell and installation.

3. General specification

3.1 Mechanism

3.1.1 Disc loading: Motorized loading.

3.1.2 Disc ejecting: Motorized ejection.

3.1.3 Play: Loading → auto play

3.1.4 Skew adjusting: adjust two points on the base of spindle motor.

3.1.5 Pick-up feed mode: gear and rack drive.

3.1.6 Range of pick-up movement: 22.5mm ~ 59mm, from the center of spindle motor.

3.1.7

Anti vibration: two steps of dampers to reduce the vibration.

3.2 Power supply

DC12 ±1V（600 mA）& DC5±0.2V (660 mA) .

3.3 Pick-up

3.3.1 Pick-up: PVR-520T、PVR-502W（MITSUMI）、HOP-1200S（W）（HITACHI）、OPU-3153（SANKYO）、SF-HD62（SANYO）、SF-HD65（SANYO）two laser diode and single object lens pickup.

3.4 Motor

3.4.1 Spindle motor: DC brush motor: CCM03-030R1-26O ((Moretech).

3.4.2 Sled motor： WRF-300CA-09600.

3.4.3 Loading motor： WFF-050SB-10200.

3.5 Detect switch

3.5.1 Pick-up inner position detecting SW: （WI-A278）、（DS3-A-0001）

3.5.2 Disc chucking detecting SW: ESE22 (Type B)×1pcs

3.5.3 Disc detecting SW: ESE22 (Type B)×2pcs (Panasonic).

3.6 Weight: approximate 476 g.

4. General performance

4.1 Disc specification

Diameter of disc：Φ120±0.3，Φ80±0.3

Thickness of Disc：1.2(+0.3,-0.1)

Type of disc：

DVD Video;
CD-DA;
Video CD;
CD-R, CD-RW;

4.2

Prevention from the 2nd disc insertion: the second disc can't be loaded when there is a disc in mechanism.

4.3

Noise Spec. ≤65 dB（A）

Noise level tests shall be carried out in an anechoic room with background noise 20 dB（A） or less.Noise shall be measured at a position 10cm from the front of the mechanical section.

5. Conditions of operation and storage

5.1 Operation temperature range: 0℃ ~ +45℃.

5.2 Range of storage: -20℃ ~ +60℃

5.3 Operation moisture range: 10% ~ 80% RH.

5.4 Storage moisture range: 0% ~ 90% RH.

5.5 Atmospheric pressure: 860mBar ~ 1060 mBar.

6. Condition of performance evaluation

6.1 Installation: see attachment. Tightened on work table; Installation angle:

forth and back: ±10 º, left and right: ±10 º.

6.2 Environment of evaluation

Temperature： 25±2℃

Humidity ： 60±5％（RH）

But，if have no doubt to the evaluation result,you can aslo according to the following items:

Temperature ： +15℃ ~ +30℃

Humidity ： 45% ~ 75%RH

Noise: in an anechoic room with background noise 20dB (A) or less.

6.3 Test circuit and equipment

6.3.1

Refer FORYOU's standard circuit and equivalent.

7. Reliability test

7.1 Environment test

Item	Specification
7.1.1 Test of high temperature storage	After 24hours kept at +60℃, and then 16 hours at room temperature, the mechanism shall be able to load/eject and playback within this process.(Test disc:TCD-792 and TDV-520A)
7.1.2 Test of low temperature storage	After 24hours kept at -20℃, and then 16 hours at room temperature, the mechanism shall be able to load/eject and playback within this process.(Test disc:TCD-792 and TDV-520A)
7.1.3 Test of high temperature and high moisture storage	After 48hours kept at +40℃, 90%RH, and then 16 hours at room temperature, the mechanism shall be able to load/eject and playback within this process.(Test disc:TCD-792 and TDV-520A)

7.1.4 High and low temperature cycling test	Applied -20℃(1H)←→60℃(1H)(temperature slope 80℃/H)，5cycles,then place at normal temperature for 16 hours, the mechanism shall be able to load/eject and playback within this process.(Test disc:TCD-792 and TDV-520A)
7.1.5 Test of high temperature operation	DVD mechanism shall be kept in 45℃ for 4 hours, and then operate, the mechanism shall be able to load/eject and playback within this process.(Test disc:TCD-792 and TDV-520A)
7.1.6 Test of low temperature operation	DVD mechanism shall be kept in 0℃ for 4 hours, and then operate, the mechanism shall be able to load/eject and playback within this process.(Test disc:TCD-792 and TDV-520A)

7.2 Life test

Item	Specification
7.2.1 Continue playback ability	When a mechanism is executed for continuous playing at room temperature for 1,000H, the mechanism shall be able to playback standard disc TDV-520A and TCD-792.
7.2.2 Feed motion	After conduct 200,000 times of pick-up feeding motion at room temperature, mechanism shall be able to playback standard disc TDV-520A and TCD-792. (One cycle: inner →outer→ inner).
7.2.3 Loading and ejection	At normal room temperature, after 10,000 times of disc loading and ejection circulation, mechanism shall be able to playback standard disc TDV-520A and TCD-792. (One cycle :Disc in →playback → disc out)

7.3 Drop and impact test:

Item	Specification

7.3.1 Shock test	(1 time ,6ms), 70G crash impact on each of 6 sides of mechanism. Mechanism shall be able to playback standard disc TDV-520A and TCD-792.
7.3.2 Drop test	After one time of drop test with surface, edge and corner (packing with 10sets per carton), the mechanism shall be able to playback standard disc TDV-520A and TCD-792. Drop with surface: drop height 600mm, Drop sequence: bottom, front, left, back, right. Each surface drop one time. Drop with corner: drop height 450mm, Drop one of corners of carton bottom one time. Drop with edge: drop height 450mm, Each edge of drop corner (three edges) drop one time.

7.4 Durability test of vibration

Item	Specification
7.4.1 Durability test of vibration	Acceleration 2.5G, Frequency 10~50Hz, sweep time 5minutes, test time is 20minutes with each of 3 directions. After that test, mechanism shall be able to playback standard disc TDV-520A and TCD-792.

7.5

The test environment is the same as item 6.2 except for special note.

8.

Ref appearance drawing

9. Caution:

9.1

It is not allowed to disassembly and re-tune the mechanism without special training because the mechanism is assembled and tuned using special method.

9.2

Storage: avoid storing the mechanism in high temperature, heavy wet and dusty place.

9.3 Handling: avoid extra force to the mechanism when handling.

9.4 Static-proof action should be taken when touch the mechanism since LD and OEIC can be easily damaged by static.

9.5

Hand touch pickup is forbidden.

9.6

Must avoid laser beam shooting at eyes directly since the laser beam can hurt eyes.

10. Attachment

10.1

《Model Description in detail》

10.2

《Appearance drawing of DL-06》

10.3

《Mechanism schematic diagram of DL-06，set in PCB of customer》

10.4

《customer Servo PCB of DL-06》

10.5

《Package specification of DL-06》

10.6

《Guide of Mechanism installation and cantions on assembly》

10.7

《installation screw》

10.1《Model of list》

Series No.	Model No.	Pick-Up	SPINDLE MOTOR	Loading motor：	Sled motor：
1	DL-06L	PVR-520T (MITSUMI)	CCM03-030R1-26O (Moretech)	WFF-050SB-10200	WRF-300CA-09600
2	DL-06LH	HOP-1200 (HITACHI)	Same as above	Same as above	Same as above
3	DL-06H	HOP-1200 (HITACHI)	Same as above	Same as above	Same as above
4	DL-06LS	SF-HD62(65) (SANYO)	Same as above	Same as above	Same as above
5	DL-06LS-M	SF-HD62 (65) (SANYO)	Same as above	Same as above	Same as above
6	DL-06LW	PVR-502W (MITSUMI)	Same as above	Same as above	Same as above

Chunghwa Picture Tubes, Ltd.
Technical Specification

To : **Normal for SECC**
Date : 2004.11.15

CPT TFT-LCD

CLAA320WA01

ACCEPTED BY：

TENTATIVE

APPROVED BY	CHECKED BY	PREPARED BY

Product Planning management General Division

CHUNGHWA PICTURE TUBES, LTD.

1127 Hopin Rd., Padeh, Taoyuan, Taiwan 334, R.O.C.
TEL: +886-3-3675151 FAX: +886-3-377-3054

Doc.No:	CLAA320WA01-Ver1.2-041115	Issue Date:	2004/11/15

T- 3650002- 000- A NEW

RECORD OF REVISIONS

Revision No.	Date	Page	Description
Ver1.0	2004/10/18	all	Preliminary specification was first issued .
Ver1.1	2004/10/25	--	Update
Ver1.2	2004/11/15	--	Update

CONTENTS

No	Item	Page
1	OVERVIEW	3
2	ABSOLUTE MAXIMUM RATINGS	4
3	ELECTRICAL CHARACTERISTICS	5
4	INTERFACE PIN CONNECTION	10
5	INTERFACE TIMING	13
6	BLOCK DIAGRAM	18
7	MECHANICAL SPECIFICATION	19
8	OPTICAL CHARACTERISTICS	21
9	RELIABILITY TEST CONDITIONS	26
10	PACKAGING	27
11	DEFINITION OF LABELS	29
12	HANDLING PRECAUTIONS FOR TFT-LCD MODULE	31

1. OVERVIEW

CLAA320WA01 is 32” color (80.04cm) TFT-LCD (Thin Film Transistor Liquid Crystal Display) module composed of LCD panel, LVDS driver ICs, control circuit and backlight. By applying 8 bit digital data, 1366*768, 16.7 million-color images are displayed on the 32” diagonal screen. Interface of data and control signals is Typ. Inverter for backlight is included in this module. General specification are summarized in the following table:

1.1GENERAL INFORMATION

Items	Specifications	Unit
Display Area	697.68(H) × 392.25(V) (31.51 inch diagonal)	mm
Number of Pixels	1366(H) × 768(V)	16:9
Pixel Pitch	0.51075(H) × 0.51075(V)	mm
Color Pixel Arrangement	RGB Vertical Strip	
Display Mode	Normally Black	
Number of Colors	16.7M (8bits)	color
Surface Treatment	Hard coating : 3H , Anti-reflective coating <less than 2% reflection.	
Total Module Power	115	W

1.2 MECHANICAL INFORMATION

Items			Min	Typ.	Max.	Unit
Module outline dimension	Horizontal(H)		742.0	743.0	744.0	mm
	Vertical(V)		446.0	447.0	448.0	mm
	Depth(D)	without inverter	41.0	42.0	43.0	mm
		with inverter	43.0	44.0	45.0	mm
Module Weight			7900	8100	8300	g

2. ABSOLUTE MAXIMUM RATINGS

The following are maximun values which, if exceeded, may cause faulty operation or damage to the Unit

ITEM		SYMBOL	MIN.	MAX.	UNIT	Remark
Power Supply Voltage For LCD		VCC	-0.3	16.0	V	
Input voltage of inverter		VBL	21.6	26.4	V	
Input current of inverter		IIN	--	9	A	
Inverter dimming		VDIM	0	5	Vdc	
Inverter frequency		FL	43	53	kHz	
Backlight striking time		Ts		1	Sec.	
Backlight on/off control voltage	ON	V_{BLON}	2.4	5	Vdc	
	OFF		0	1	Vdc	
ESD		VESDt	-100	100	V	
		VESDc	-8000	8000	V	
ICC Rush Current		IRUSH	--	12	A	
Operation Ambient Temperature		T_{op}	0	50	℃	*1) *2) *3) *4)
Storage Temperature		T_{stg}	-20	60	℃	*1) *2) *3) *4)

[Note]

*1) The relative temperature and humidity range are as below sketch, 90%RHMax. (Ta≦40℃)
Humidity≦85%RH without condensation.
Relative Humidity ≦90% (Ta≦ 40℃) , Wet Bulb Temperature ≦39℃(Ta≧40℃)

*2) The maximum wet bulb temperature ≦39℃(Ta＞40℃) and without dewing.

*3) If you use the product in a environment which over the definition of temperature and humidity too long ,this will effect the result of visual inspecfion.

*4) If you operate the product in normal temperature range, the center surface of panel should be under 60℃.

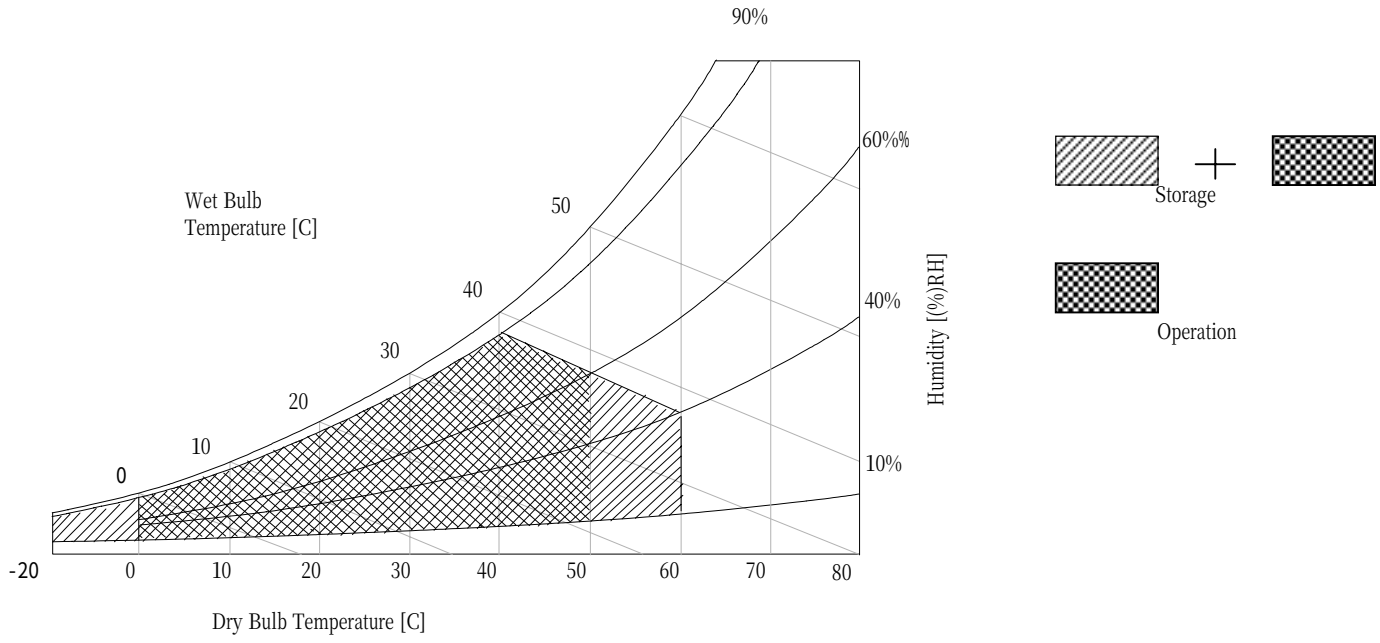

3. ELECTRICAL CHARACTERISTICS

(a). TFT-LCD Ta=25℃

ITEM		SYMBOL	MIN	TYP	MAX	UNIT	REMARK
LCD Power Supply Voltage		VCC	11.4	12.0	12.6	V	[Note 1]
Ripple Voltage		Vrpd	--	--	100	mVp-p	VIN=+12.0V
Rush current		Irush	--	--	8	A	[Note 2]
LCD Power Supply Current	White	ICC	--	400	--	mA	[Note 3]
	Black		--	350	--		
	RGB stripe		--	390	--		
LCD power consumption		Pc	--	6.48	9.7	W	
High input voltage of LVDS		V_{IN+}	--	--	100	mV	[Note 4] [Note 5]
Low input voltage of LVDS		V_{IN-}	100	--	--	mV	
Input common voltage of LVDS		VCM	--	1.25	-	V	
Input terminal resist of LVDS		R_T	--	100	--	ohm	

[Note 1] The module should be always operated within above ranges.

[Note 2] Measure conditions：

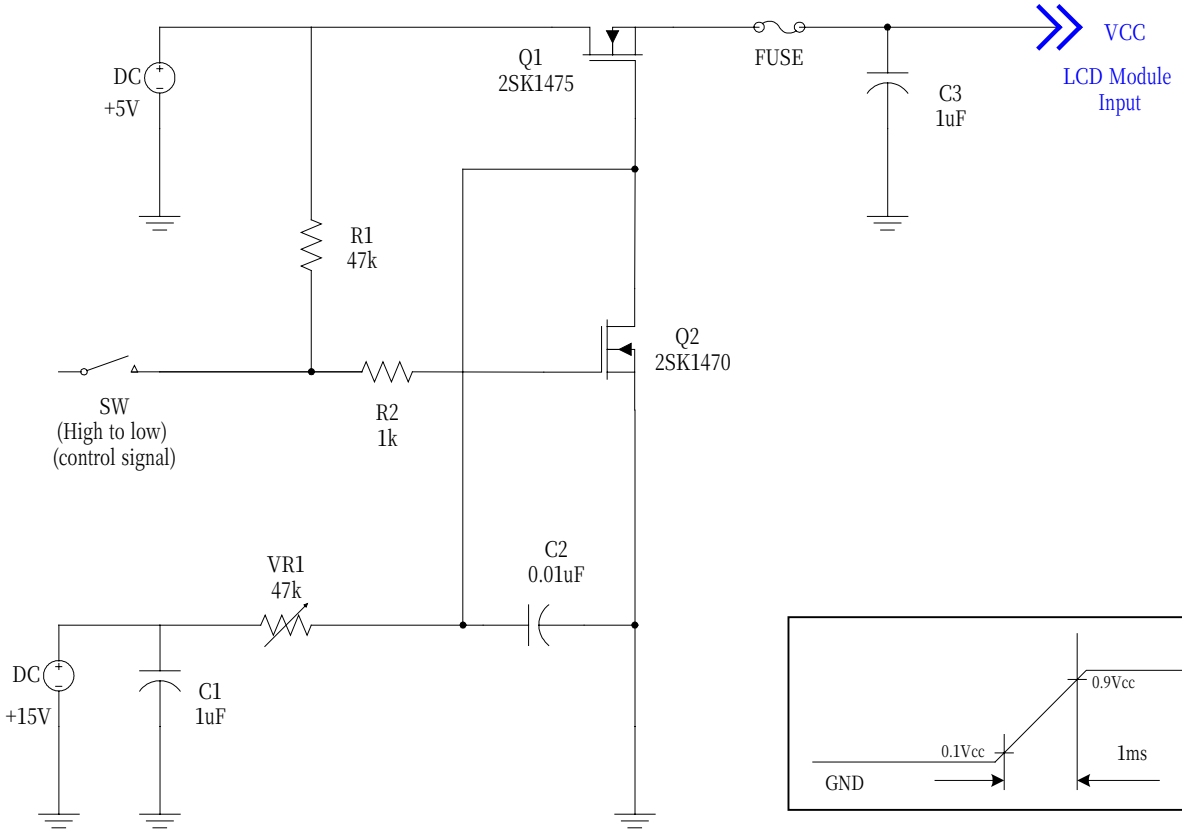

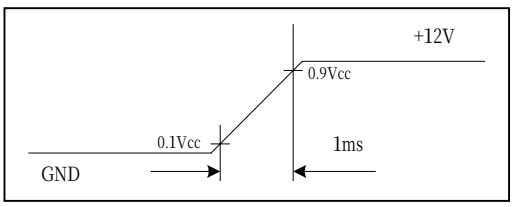

Vcc rising time is 1 ms

[Note 3] The specified power supply current is under condition at Vcc=12V, Ta=25+/-2℃, f_v=60Hz , whereas a power dissipation check pattern below is displayed.

a. White pattern

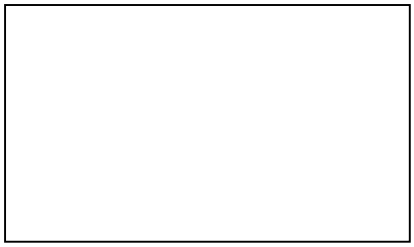

b. Black pattern

c. RGB Stripe pattern

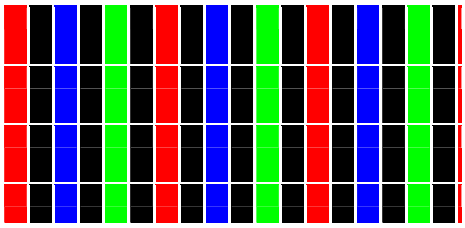

[Note 4] Power and signal sequence：

t1 ≦ 30ms

0＜ t2 ＜ 50ms

0＜ t3 ≦ 50ms

300ms ≦ t4

500ms ≦ t5

100ms ≦ t6

300＜ t7 ≦500ms

300＜ t8 ≦500ms

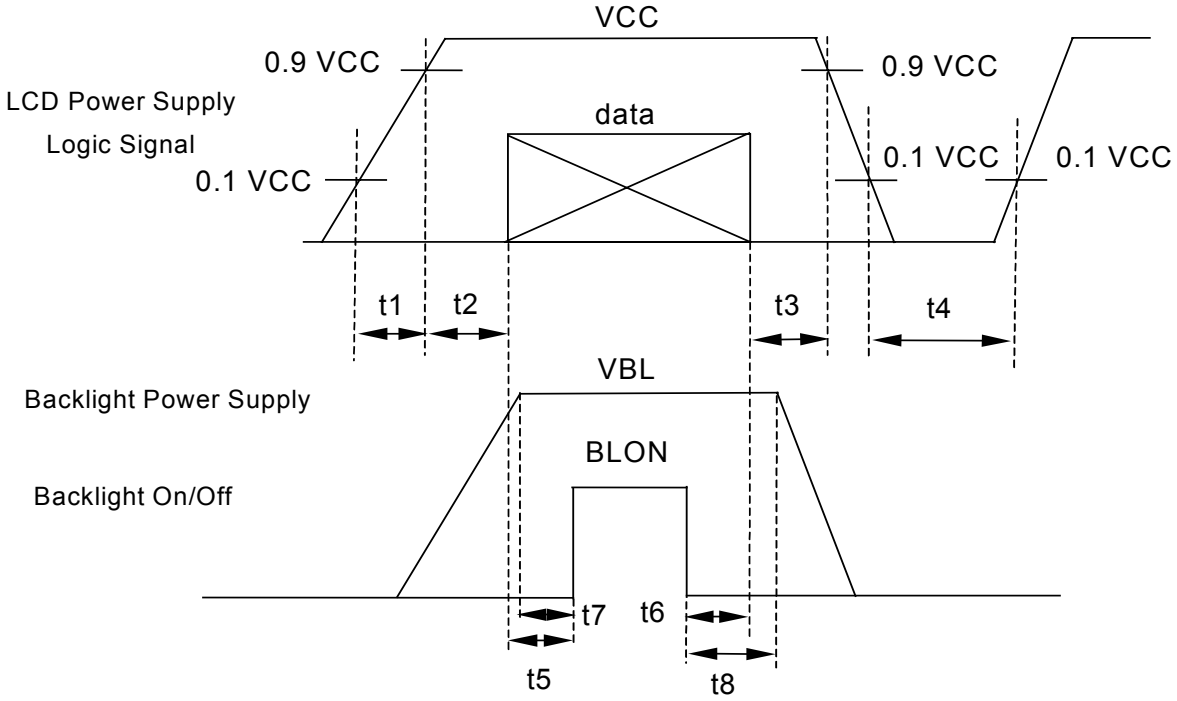

Data: RGB DATA, DCLK, DENA

VCC-dip state：

1) When 9V≦VCC＜11.4 V， td≦10 ms.
2) VCC ＞ 11.4V， VCC-dip condition should also follow the VCC-turn-off condition.

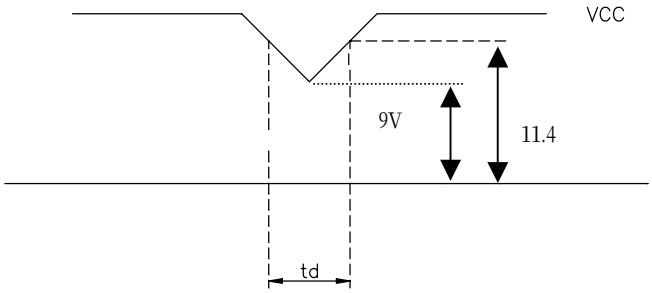

[Note 5] LVDS signal definition ：

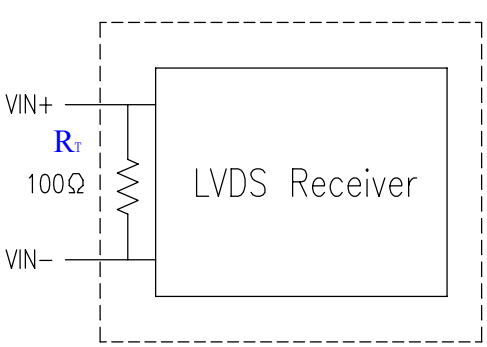

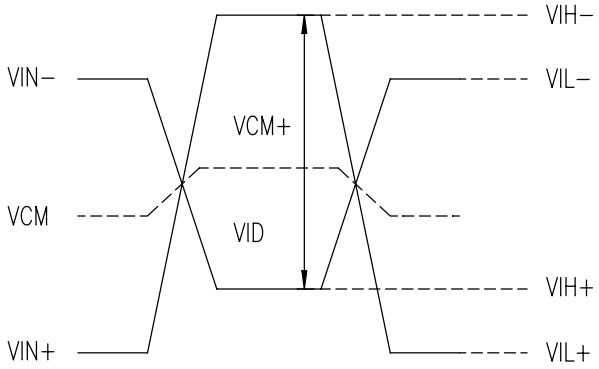

VID = VIN_+ – VIN-,

△VCM = ｜VCM_+–VCM-｜,

△VID = ｜VID_+–VID-｜,

VID+ = ｜VIH_+–VIH-｜,

VID- = ｜VIL_+–VIL-｜,

VCM = (VIN_++VIN-) / 2,

VCM+ = (VIH_++VIH-) / 2,

VCM- =(VIL_++VIL-) / 2

VIN+: Positive differential DATA & CLK input

VIN-: Negative differential DATA & CLK input

(b). Backlight

Ta=25℃

ITEM		SYMBOL	MIN	TYP	MAX	UNIT	REMARK
Lamp Voltage		VL	--	1150	--	Vrms	IL=5.0mA
Lamp Current		IL	4.7	5.0	5.3	mArms	[Note 1]
Lamp life time		LT	50,000	60,000	--	hr	[Note 2]
Input voltage of inverter		VBL	21.6	24	26.4	V	[Note 3]
Input current of inverter		IIN	0	4.3	5	A	
Input frequency of inverter		FL	43	48	53	KHz	[Note 4]
Inverter dimming		VDIM	0	--	5	Vdc	[Note 5]
Inverter duty ratio		--	30	--	100	%	VDIM=5V(MAX.)
Inverter opening voltage		Vopen	2300	--	2700	Vrms	
Backlight on /of control voltage	ON	V_{BLON}	2.4	--	5	V	[Note 6]
	OFF		0	--	1		
Power consumption (Panel+ Backlight)		BLW	--	105	115	W	After starting 30 mins
Start up Voltage	Ta=0℃	Vs	2300	--	3000	Vrms	
	Ta=25℃		1960	--	3000		

[Note]

*1) Lamp Current measurement method (The current meter is connected to low voltage end)
Take the average of 16 CCFL's lamp current as V_{DIM} = 5V .

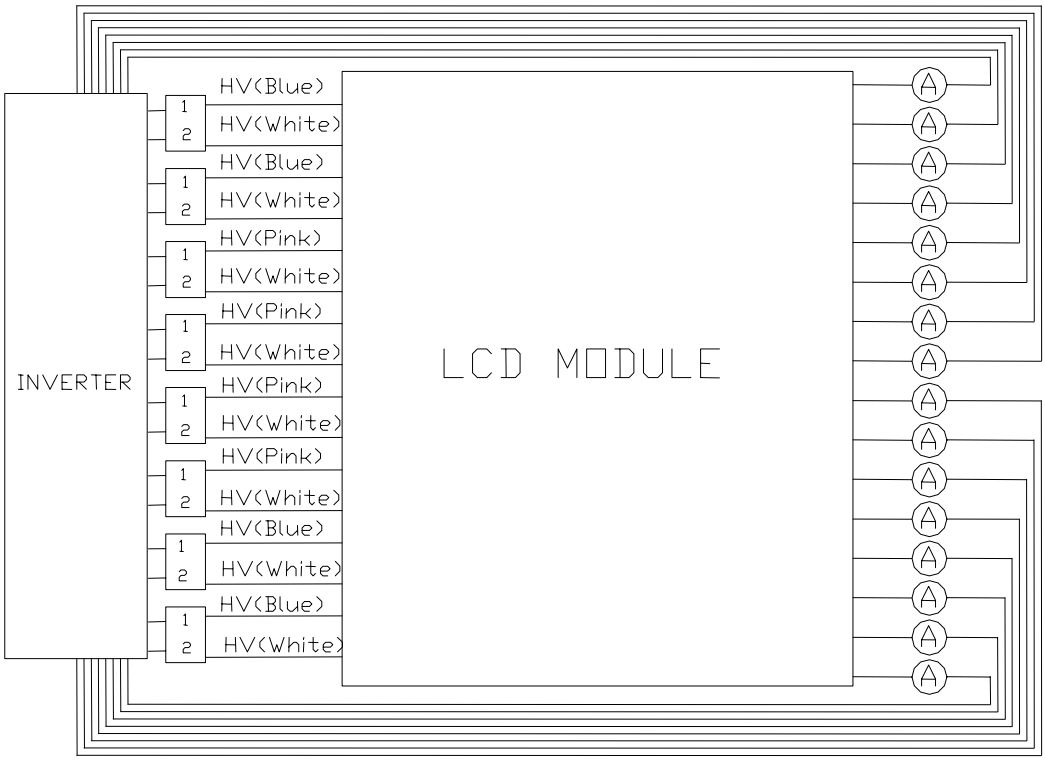

*2) Definition of the lamp life time：
When lamp luminance redue to 50% or lower than its initial value.

*3) Ripple voltage that occars at the instant of power-on can't exceed 30V.

*4) Electrical and optical characterisitics color chromaticity is not included can maintain in a range +/- 10% when the inverter operates within this frequency range.

*5) Brightness is the darkest when V_{DIM} = 0V ; Brightness is the darkest when V_{DIM} = 5V .

*6) Backlight turns off when V_{BLON} = 0V ; turns on when V_{BLON} = 5V(24V must be input in advance)

4. INTERFACE PIN CONNECTION

(a).Connector Part No.：FI-X30SSL-HF(JAE) or compatible

PIN NO	SYMBOL	DESCRIPTION	NOTE
1	VCC	Power supply: +12V	
2	VCC	Power supply: +12V	
3	GND	Ground	
4	GND	Ground	
5	RxIN0-	Data-	
6	RxIN0+	Data+	
7	GND	Ground	
8	RxIN1-	Data-	
9	RxIN1+	Data+	
10	GND	Ground	
11	RxIN2-	Data-	
12	RxIN2+	Data+	
13	GND	Ground	
14	RxCLKIN-	Clock-	
15	RxCLKIN+	Clock+	
16	GND	Ground	
17	RxIN3-	Data-	
18	RxIN3+	Data+	
19	GND	Ground	
20	NC	Reserved	
21	NC	Reserved	
22	NC	Reserved	[Note 1]
23	ColorMD1	Color Option (1)	[Note 3]
24	ColorMD2	Color Option (2)	
25	NC	Reserved	
26	NC	Reserved	
27	DMS	LVDS Option	[Note 2]
28	GND	Ground	
29	GND	Ground	
30	GND	Ground	

[Note 1] NC for internal use. Let it open.

[Note 2] High (3.3V) →JEIDA LVDS format；Low (GND) →None-JEIDA LVDS format,**It should be input High or Low logic level，it can't be NC(Open).**

[Note 3] Color matrix selection. It should be input High or Low logic level， it can't be NC**(Open).**

ColorMD2	**ColorMD1**	**Mode**
L	L	Color 1(Native color)
L	H	Color 2
H	L	Color 3
H	H	Color 4

(b) LVDS Interface：**LVDS Receiver：Tcon (LVDS Rx embeded)**

	LVDS PIN	JEIDA-DATA	Normal DATA
TxOUT/RxIN0	TxIN/RxOUT0	R2	R0
	TxIN/RxOUT1	R3	R1
	TxIN/RxOUT2	R4	R2
	TxIN/RxOUT3	R5	R3
	TxIN/RxOUT4	R6	R4
	TxIN/RxOUT6	R7	R5
	TxIN/RxOUT7	G2	G0
TxOUT/RxIN1	TxIN/RxOUT8	G3	G1
	TxIN/RxOUT9	G4	G2
	TxIN/RxOUT12	G5	G3
	TxIN/RxOUT13	G6	G4
	TxIN/RxOUT14	G7	G5
	TxIN/RxOUT15	B2	B0
	TxIN/RxOUT18	B3	B1
TxOUT/RxIN2	TxIN/RxOUT19	B4	B2
	TxIN/RxOUT20	B5	B3
	TxIN/RxOUT21	B6	B4
	TxIN/RxOUT22	B7	B5
	TxIN/RxOUT24	HSYNC	HSYNC
	TxIN/RxOUT25	VSYNC	VSYNC
	TxIN/RxOUT26	DENA	DENA
TxOUT/RxIN3	TxIN/RxOUT27	R0	R6
	TxIN/RxOUT5	R1	R7
	TxIN/RxOUT10	G0	G6
	TxIN/RxOUT11	G1	G7
	TxIN/RxOUT16	B0	B6
	TxIN/RxOUT17	B1	B7
	TxIN/RxOUT23	RESERVED	RESERVED

(c) Inverter – side connector：PHR-14(JST)

PIN NO	SYMBOL	DESCRIPTION	NOTE
1	VBL	Supply Voltage 24V	
2	VBL	Supply Voltage 24V	
3	VBL	Supply Voltage 24V	
4	VBL	Supply Voltage 24V	
5	VBL	Supply Voltage 24V	
6	GND	Ground	
7	GND	Ground	
8	GND	Ground	
9	GND	Ground	
10	GND	Ground	
11	NC	NC(Test pin or else)	
12	BLON	ON/OFF Control	[Note 1]
13	VDIM	0V~5V	[Note 2]
14	GND	GND	

[Note 1] ON=5V , OFF=0V；When this PIN is disconnecting with power， the Inverter is in OFF status.

[Note 2] Max Brightness =5V， Min Brightness =0V；When this PIN is disconnecting with power， the output status of Inverter is the same as VDIM＝0V.

5. INTERFACE TIMING(DE only mode)

(1) Timing Specification

ITEM				SYMBOL	MIN.	TYP.	MAX.	UNIT
LCD Timing	DCLK		Freq.	f_{CLK}	68	80	84	MHz
			Cycle	t_{CLK}	14.7	12.5	11.9	ns
	DENA	Horizontal	Line Rate	f_H	43.17	48.54	53.33	kHz
			Horizontal total time	t_H	1575	1648	1936	t_{CLK}
			Horiaontal effective time	t_{HA}	---	1366	---	t_{CLK}
			Horizontal blank time	t_{HB}	209	282	570	t_{CLK}
		Vertical	Frame Rate	Fr	54.65	60	67.51	Hz
			Vertical total time	t_V	790	810	888	t_H
			Vertical effective time	t_{VA}	768	768	768	t_H
			Vertical blank time	t_{VB}	22	42	120	t_H

[Note]

1).The best result of over-driving is in frame rate =60Hz.

2).This module is operated in DE only mode. Hsync and Vsync input signals should be set to low logic level. Otherwise, this module would be operated abnormally.

3).DE (DATA ENABLE) is usually in positive.

(2) Timing Chart

a. Horizontal Timing

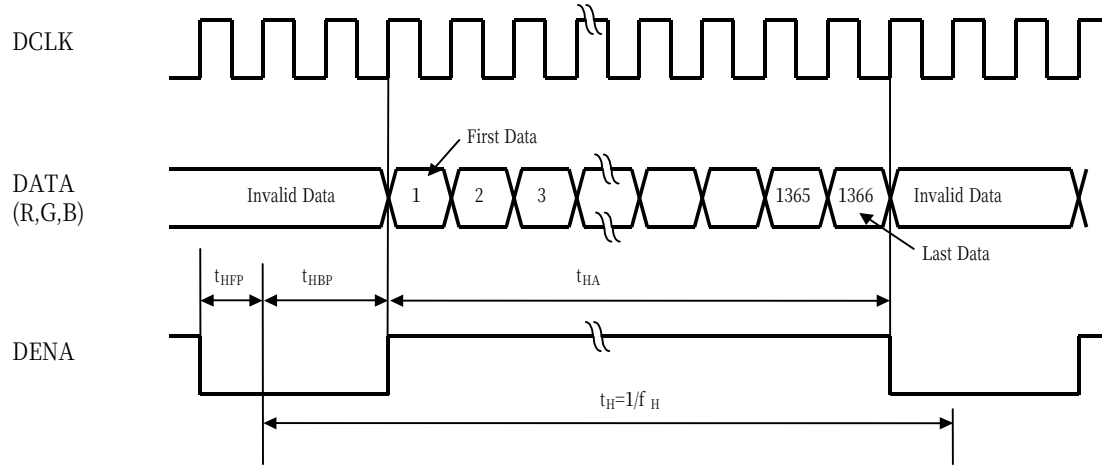

b. Vertical Timing Chart

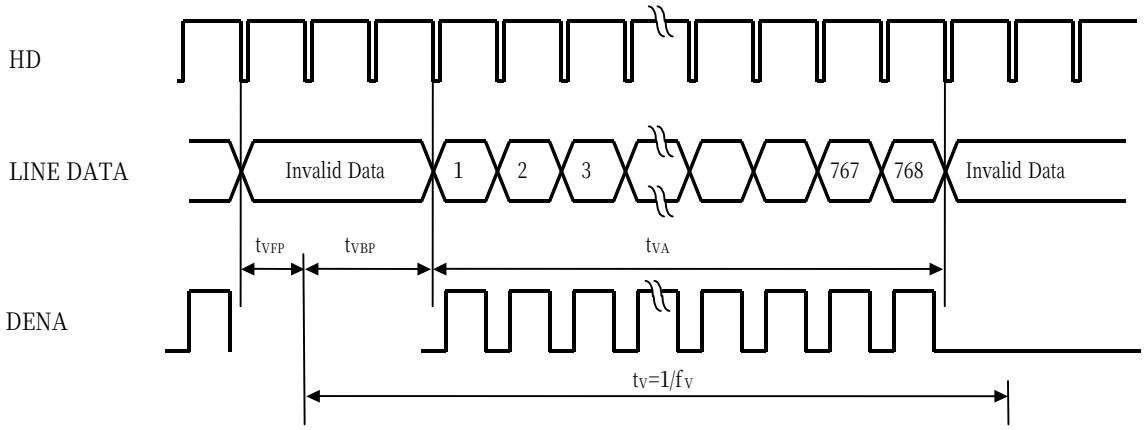

(3) LVDS DATA MAPPING

a.None-JEIDA normal Specification

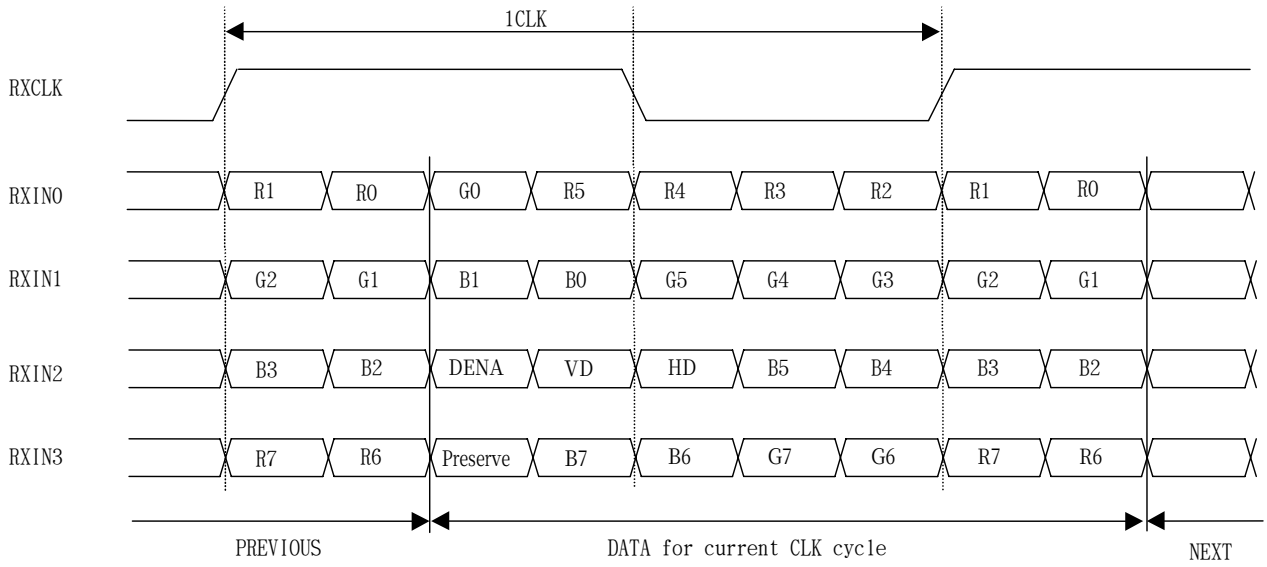

b.JEIDA Specification

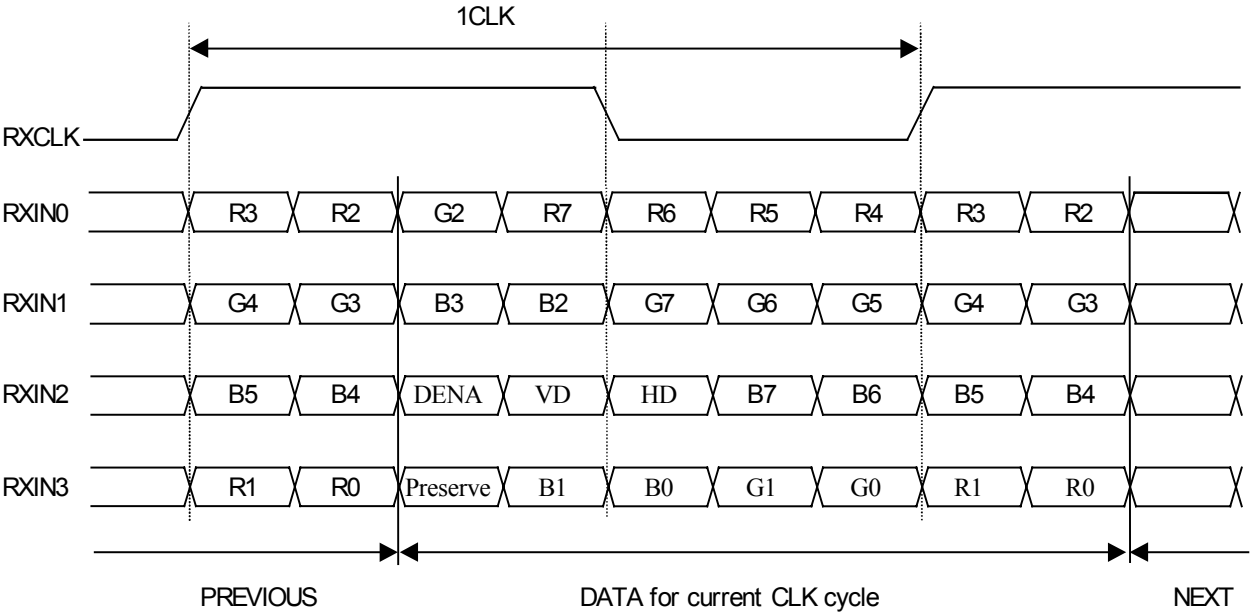

8bit LSB:R0,G0,B0

Parallel TTL Data Inputs Mapped to LVDS outputs

(4) LVDS INTERFACE

8bit LSB：R0,G0,B0

Parallel TTL Data Inputs Mapped to LVDS outputs

TRANSMITTER(THC63LVD823)		INTERFACE CONNECTOR		TIMING CONTROLLER INPUT
PIN NO	INPUT DATA	HOST	TFT_LCD	
51	TA0	TxOUT0+ TxOUT0-	TA+ TA-	R2
52	TA1			R3
54	TA2			R4
55	TA3			R5
56	TA4			R6
3	TA5			R7 (MSB)
4	TA6			G2
6	TB0	TxOUT1+ TxOUT1-	TB+ TB-	G3
7	TB1			G4
11	TB2			G5
12	TB3			G6
14	TB4			G7 (MSB)
15	TB5			B2
19	TB6			B3
20	TC0	TxOUT2+ TxOUT2-	TC+ TC-	B4
22	TC1			B5
23	TC2			B6
24	TC3			B7 (MSB)
27	TC4			Reserved
28	TC5			Reserved
30	TC6			DENA
50	TD0	TxOUT3+ TxOUT3-	TD+ TD-	R0 (LSB)
2	TD1			R1
8	TD2			G0 (LSB)
10	TD3			G1
16	TD4			B0 (LSB)
18	TD5			B1
25	TD6			Reserved

(5) Color data assignment

COLOR	INPUT DATA	R DATA								G DATA								B DATA							
		R7 MSB	R6	R5	R4	R3	R2	R1	R0 LSB	G7 MSB	G6	G5	G4	G3	G2	G1	G0 LSB	B7 MSB	B6	B5	B4	B3	B2	B1	B0 LSB
BASIC COLOR	BLACK	0	0	0	0	0	0	0	0	0	0	0	0	0	0	0	0	0	0	0	0	0	0	0	0
	RED(255)	1	1	1	1	1	1	1	1	0	0	0	0	0	0	0	0	0	0	0	0	0	0	0	0
	GREEN(255)	0	0	0	0	0	0	0	0	1	1	1	1	1	1	1	1	0	0	0	0	0	0	0	0
	BLUE(255)	0	0	0	0	0	0	0	0	0	0	0	0	0	0	0	0	1	1	1	1	1	1	1	1
	CYAN	0	0	0	0	0	0	0	0	1	1	1	1	1	1	1	1	1	1	1	1	1	1	1	1
	MAGENTA	1	1	1	1	1	1	1	1	0	0	0	0	0	0	0	0	1	1	1	1	1	1	1	1
	YELLOW	1	1	1	1	1	1	1	1	1	1	1	1	1	1	1	1	0	0	0	0	0	0	0	0
	WHITE	1	1	1	1	1	1	1	1	1	1	1	1	1	1	1	1	1	1	1	1	1	1	1	1
RED	RED(0)	0	0	0	0	0	0	0	0	0	0	0	0	0	0	0	0	0	0	0	0	0	0	0	0
	RED(1)	0	0	0	0	0	0	0	1	0	0	0	0	0	0	0	0	0	0	0	0	0	0	0	0
	RED(2)	0	0	0	0	0	0	1	0	0	0	0	0	0	0	0	0	0	0	0	0	0	0	0	0
	RED(253)	1	1	1	1	1	1	0	1	0	0	0	0	0	0	0	0	0	0	0	0	0	0	0	0
	RED(254)	1	1	1	1	1	1	1	0	0	0	0	0	0	0	0	0	0	0	0	0	0	0	0	0
	RED(255)	1	1	1	1	1	1	1	1	0	0	0	0	0	0	0	0	0	0	0	0	0	0	0	0
GREEN	GREEN(0)	0	0	0	0	0	0	0	0	0	0	0	0	0	0	0	0	0	0	0	0	0	0	0	0
	GREEN(1)	0	0	0	0	0	0	0	0	0	0	0	0	0	0	0	1	0	0	0	0	0	0	0	0
	GREEN(2)	0	0	0	0	0	0	0	0	0	0	0	0	0	0	1	0	0	0	0	0	0	0	0	0
	GREEN(253)	0	0	0	0	0	0	0	0	1	1	1	1	1	1	0	1	0	0	0	0	0	0	0	0
	GREEN(254)	0	0	0	0	0	0	0	0	1	1	1	1	1	1	1	0	0	0	0	0	0	0	0	0
	GREEN(255)	0	0	0	0	0	0	0	0	1	1	1	1	1	1	1	1	0	0	0	0	0	0	0	0
BLUE	BLUE(0)	0	0	0	0	0	0	0	0	0	0	0	0	0	0	0	0	0	0	0	0	0	0	0	0
	BLUE(1)	0	0	0	0	0	0	0	0	0	0	0	0	0	0	0	0	0	0	0	0	0	0	0	1
	BLUE(2)	0	0	0	0	0	0	0	0	0	0	0	0	0	0	0	0	0	0	0	0	0	0	1	0
	BLUE(253)	0	0	0	0	0	0	0	0	0	0	0	0	0	0	0	0	1	1	1	1	1	1	0	1
	BLUE(254)	0	0	0	0	0	0	0	0	0	0	0	0	0	0	0	0	1	1	1	1	1	1	1	0
	BLUE(255)	0	0	0	0	0	0	0	0	0	0	0	0	0	0	0	0	1	1	1	1	1	1	1	1

[Note]

(1) Definition of gray scale：

Color (n)：n indicates gray scale level, higher n means brighter level.

(2)Data：1-High, 0-Low

6. BLOCK DIAGRAM

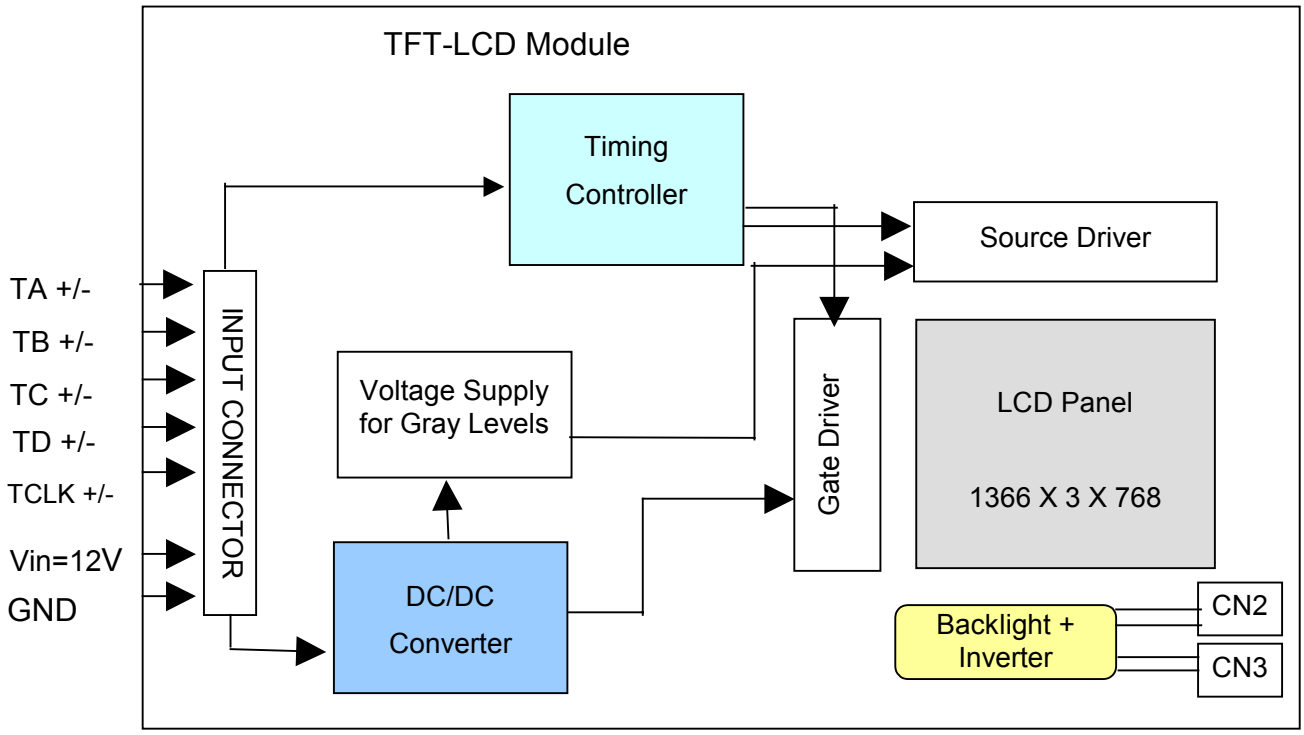

BACKLIGHT UNIT

Lamp connector

HV(CN2)： BHR-02(8.0)VS-1(JST)*8 Mating connector：SM02(8.0)B-BHS-1-TA(JST)

LV1(CN3)：DF13-8P-1.25H(HRS)*2 LV2：DF13-8S-1.25H(HRS)*2

LV3：DF13-8S-1.25H(HRS)*2 Mating connector：DF13-8P-1.25H(HRS)

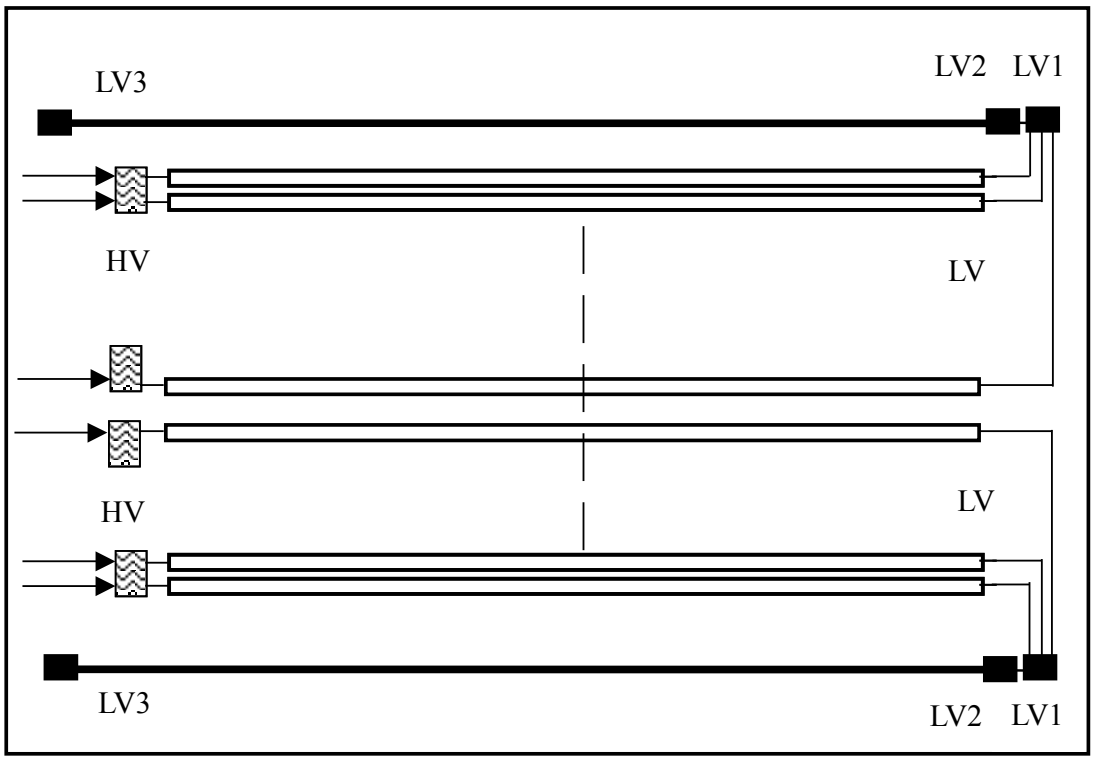

7. MECHANICAL SPECIFICATION

(1) Front side (include Inverter, if the dimension did not to eerance, please refer to the table.)

[Unit: mm]

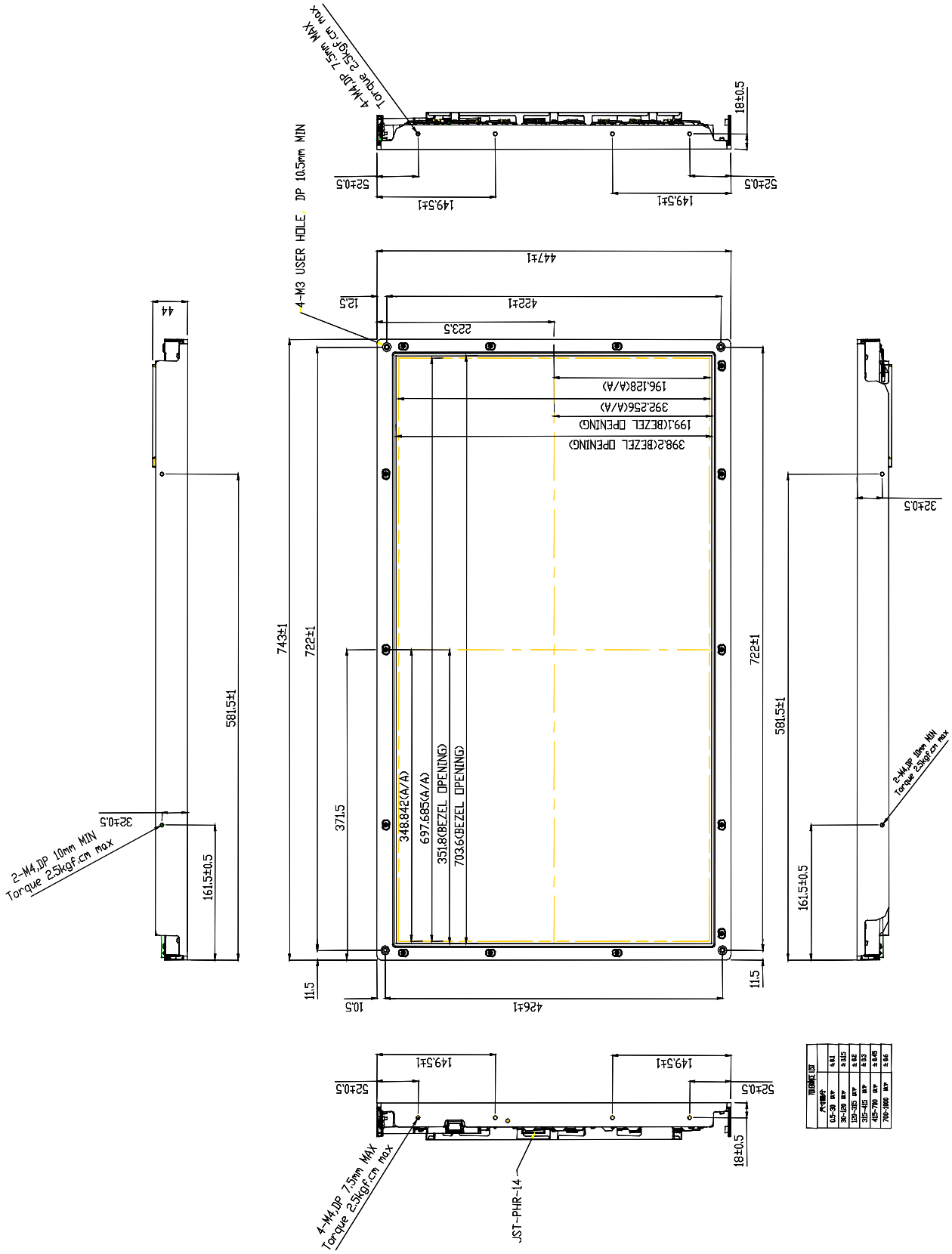

(2) Rear side (include Inverter, if the dimension did not to eerance ,please refer to the table.)

[Unit: mm]

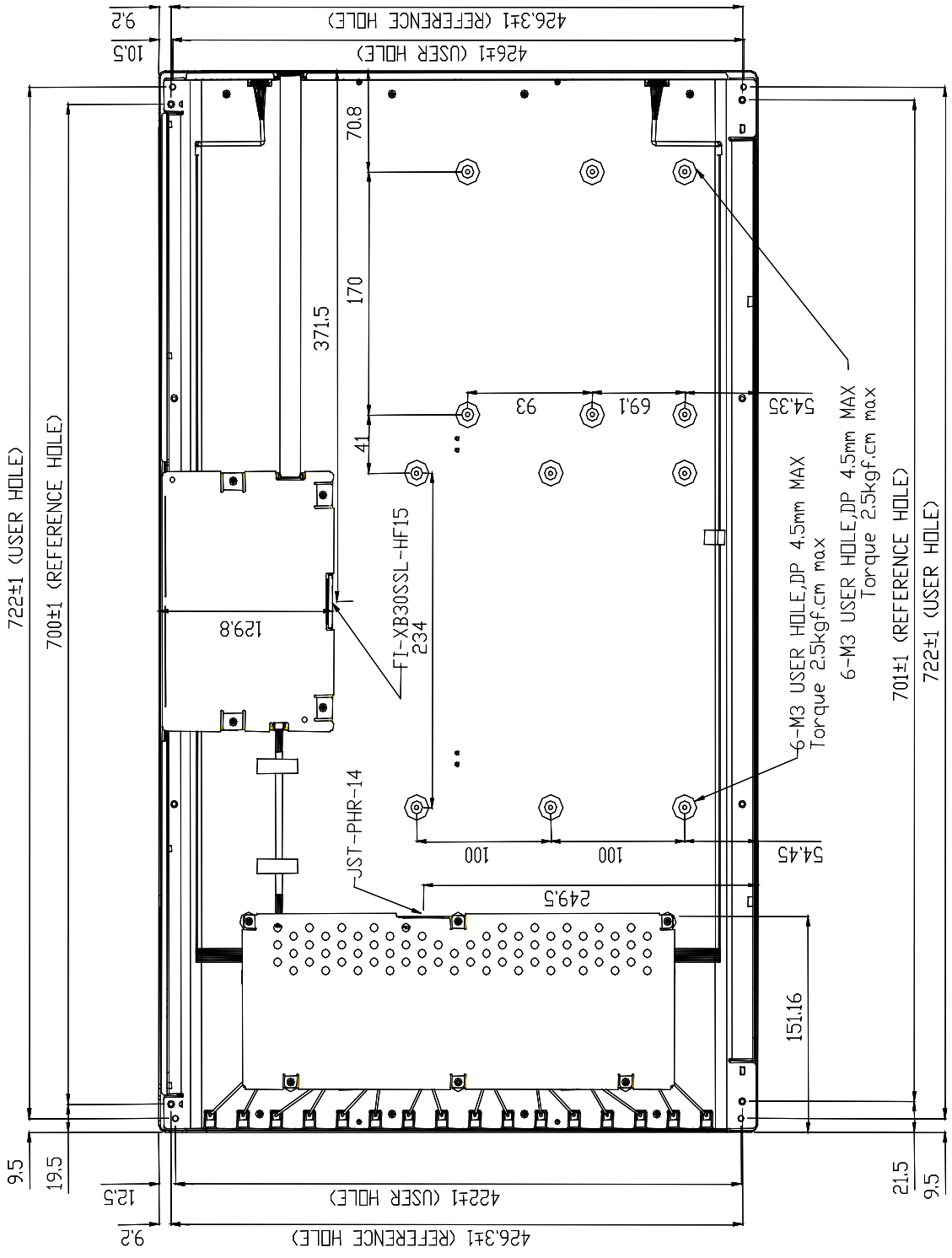

TOLERANCE LIST	
尺寸範圍	
0.5~30 MM	±0.1
30~120 MM	±0.15
120~315 MM	±0.2
315~415 MM	±0.3
415~700 MM	±0.45
700~1000 MM	±0.6

8.OPTICAL CHARACTERISTICS

Ta = 25°C, VCC=5V

ITEM		SYMBOL	CONDITION	MIN.	TYP.	MAX.	UNIT	REMARKS
Contrast (CEN)		CR	θ=ψ=0° Point-5	600	800	--	--	*1)*2)*3)
Luminance	Central luminance	Lwc	θ=ψ=0°	500	550	--	cd/m^2	
	9P Luminance (AVG)	Lw9	θ=ψ=0°	--	500	--	cd/m^2	*2)*3)
	Uniformity	△Lw	θ=ψ=0°	--	--	75	%	*2)*3)
Contrast Uniformity		△CR	θ=ψ=0°	--	--	75	%	*1)*2)*3)
Response Time (White – Black)		tr	θ=ψ=0°	--	7	15	ms	*3)*4)
		tf	θ=ψ=0°		9	15	ms	*3)*4)
Response Time (Gray to gray average)		trg, tfg		--	10	TBD	ms	*5)
Image sticking		tis	2 h	--	--	5	sec	*6)
			24 h	--	--	< 16	sec	*6)
View angle	Horizontal	ψ	CR ≧ 10 Point-5	-80~80	-85~85	--	°	*2)*3)
	Vertical	θ		-80~80	-85~85	--	°	*2)*3)
Crosstalk Ratio		CMR	θ=ψ=0°	--	--	1	%	*3)*7)
Color Chromaticity	Red	Rx Ry	θ=ψ=0° Point-5	0.610 0.295	0.640 0.325	0.670 0.355	--	*2)*3)
	Green	Gx Gy		0.235 0.596	0.265 0.626	0.295 0.656		
	Blue	Bx By		0.115 0.031	0.145 0.061	0.175 0.091		
	White	Wx Wy		0.253 0.267	0.283 0.297	0.313 0.327		
Color Temperature		Tc		--	9300	--	K	*3)
Color Gamut		CG		--	72	--	%	*8)

[Note]

These items are measured using：BM-5A (TOPCON) [under the dark room condition (no ambient light).]

Measurement Condition：

After lighting on the panel 30 mins, you can proceed the Measurement testing.

The definiton of Typ ualue is under status of lamp current = 5 mArms.(AVG)

Definition of these measurement items is as follows：

*1) Definition of Contrast Ratio：〔These items are measured using BM-5A (TOPCON) under the dark room condition (no ambient light).〕

CR=ON (White) Luminance/OFF (Black) Luminance

*2) Definition of Luminance and Luminance uniformity and Contrast and Contrast Uniformity and the Deviation of Color Coordinate：

Luminance and Contrast：To measure at the center position “5” on the screen (NO.5), see Fig.8-1 below.

Luminance uniformity：Lw (MAX) and Lw(MIN) are the maximum and minimum luminance value measure at the position “1~5” on the screen (NO.1~5), see Fig.8-1 and below show equation：

$$\Delta Lw = [\ (Lw(MIN)) / Lw(MAX)\ ] \times 100\%$$

Contrast Uniformity：CR(MAX) and CR(MIN) are the maximum and minimum contrast value measure at the position “1~5” on the screen (NO.1~5), see Fig.8-1 and below show equation.：

$$\Delta CR = [\ CR(MIN)] / CR(MAX)\ ] \times 100\%$$

The Deviation of Color Coordinate：To measure at the position “1~9” on the screen (NO.1~9), see Fig.8-1 below.

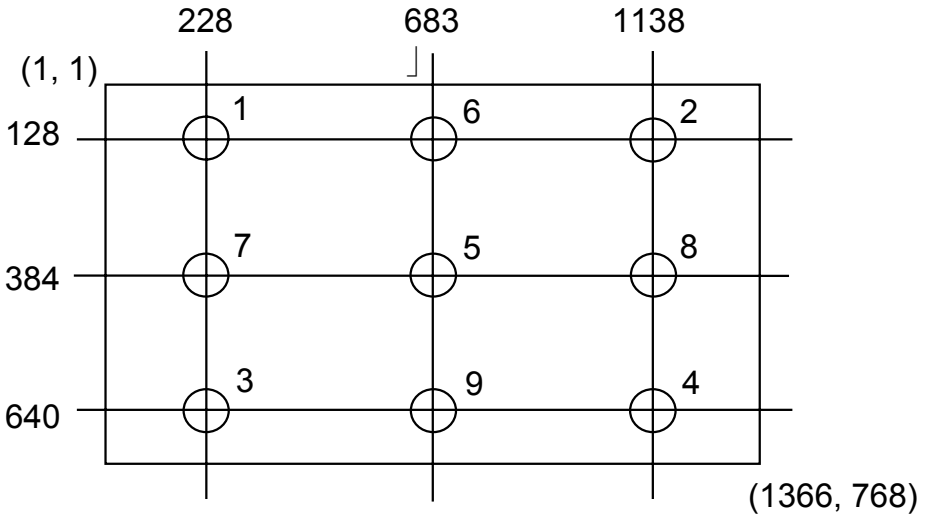

Figure 8-1. Measurement positions

*3) Definition of Viewing Angle (θ, ψ) :

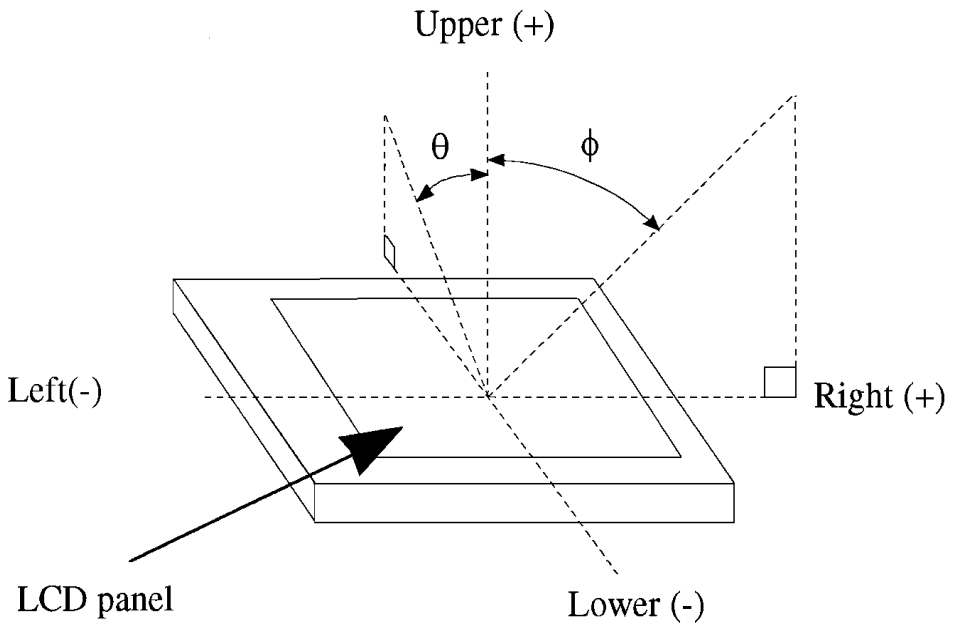

Figure 8-2. Definition of Viewing Angle

*4) Definition of Response Time (White – Black)

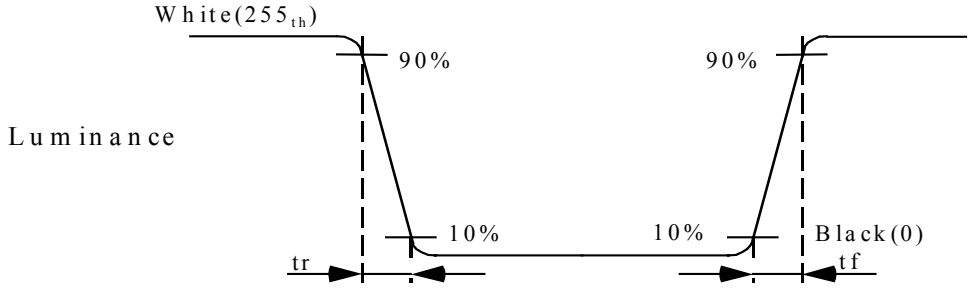

Figure 8-3. Definition of Response Time (White – Black)

*5) Definition of Response Time (Gray to Gray ,9 X 9 levels)

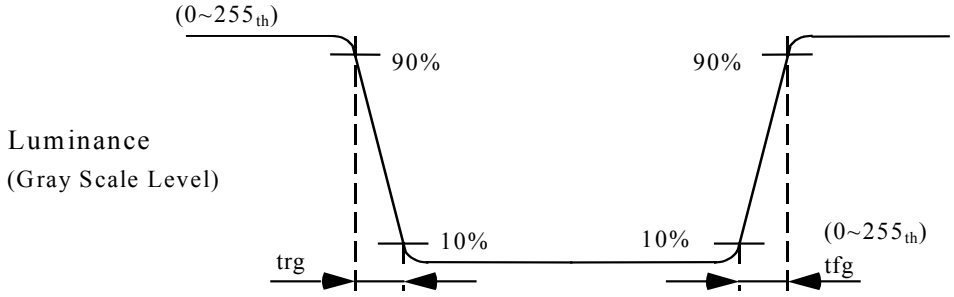

Figure 8-4. Definition of Response Time (Gray to Gray)

The driving signal time means the signal of gray level 0、31、63、95、127、159、191、223、255.

Gray to gray average means the average switching time of gray level 0、31、63、95、127、159、191、223、255 to each other.

The LCD module should be stabilized at given temperature for 1 hour to avoid abrupt temperature change during measuring. In order to stabilize the luminance， the measurement should be executed after lighting Backlight for 1 hour in a windless room.

*6) Image sticking test method:

Continuously display the test pattern shown in the figure below for specified time. To change the module frame to gray pattern (gray 127 pattern) , and it's displaying grade still under specfication.

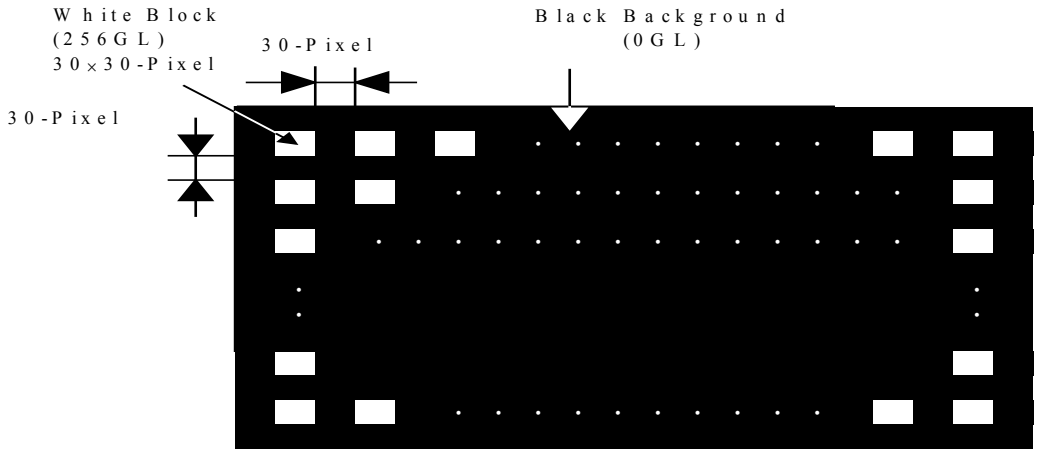

Figure 8-4. the pattern of Image sticking test

*7) Definition of Cross talk Ratio

CMR = MAX (***(| (LB1-LA) / LC |) × 100 % , (| (LB2 – LA) / LC |) × 100 %***)

LA： Pattern A(Half-Tone pattern) Measure point Luminance

LB1, LB2： Pattern B1、Pattern B2 Measure point Luminance

LC： Pattern C(white pattern) Measure point Luminance

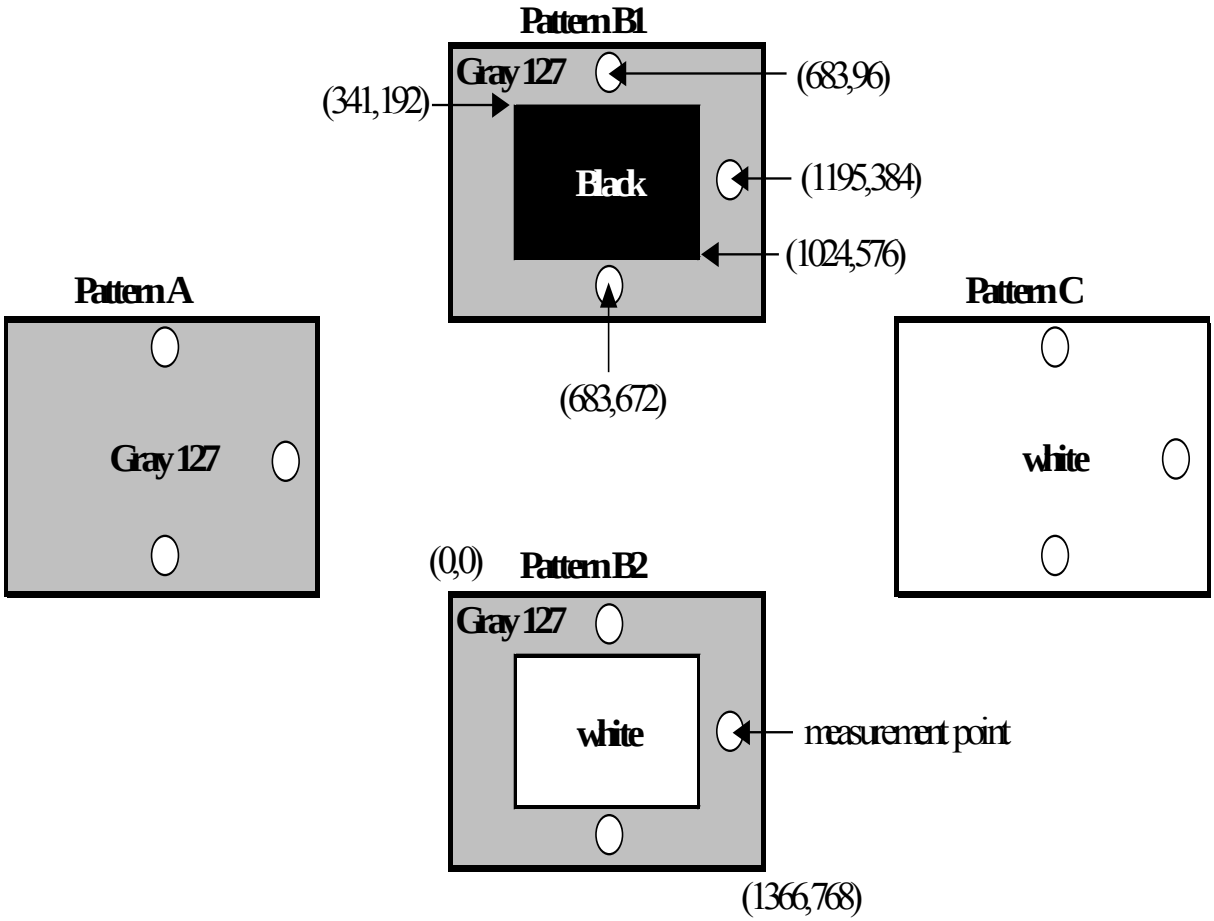

Figure 8-4. Cross talk

*8) Definition of Color Gamut:

To measure RGB three sub-pixels color gamut coordinate at CIE coordinate chart from the center of module , to form a triangle area = A_{RGB}.

RGB three sub-pixels of NTSC at CIE coordinate chart to form a triangle area = N_{RGB}.

$$CG = \frac{A_{RGB}}{N_{RGB}} \times 100$$

9.RELIABILITY TEST CONDITIONS

(1)Temperature and Humidity

TEST ITEMS	CONDITIONS
High Temperature Operation	50℃；240hrs
High Temperature Storage	60℃；240hrs
High Temperature High Humidity Operation	50℃；90% RH；240 hrs (No condensation)
Low Temperature Operation	0℃；240 hrs
Low Temperature Storage	-20℃；240 hrs
Thermal Shock	Between -20℃(1hr) and 60℃(1hr)； 100 Cycles

(2)Shock & Vibration

ITEMS	CONDITIONS
Shock (Non-Operation)	Shock level：980m/s^2(100G) Waveform：half sinusoidal wave, 2ms Number of shocks：one shock input in each direction of three mutually perpendicular axes for a total of six shock inputs.
Vibration (Non-Operation)	Vibration level：9.8m/s^2(1.5G) zero to peak Waveform：sinusoidal Frequency range：10 to 300 Hz Frequency sweep rate：0.5 octave/min Duration：one sweep from 10 to 300Hz in each of three mutually perpendicular axis(each x, y, z axis：10 min, total 30 mins)

(3) Judgment standard

The judgment of the above test should be made as follow:

Pass: Normal display image with no obvious non-uniformity and no line defect.

Partial transformation of the module parts shall be ignored.

Fail: No display , obvious non-uniformity, or line defects.

10.PACKAGING

10.1 PACKING SPECIFICATIONS

(1) 3 LCD TV modules/1 Box

(2) Box dimensions：975(L) x 375(W) x 562(H)

(3) Weight：approximately 31.6kg (3 modules per box)

10.2 PACKING METHOD

Fiqurs 1 and 2 are the packing method

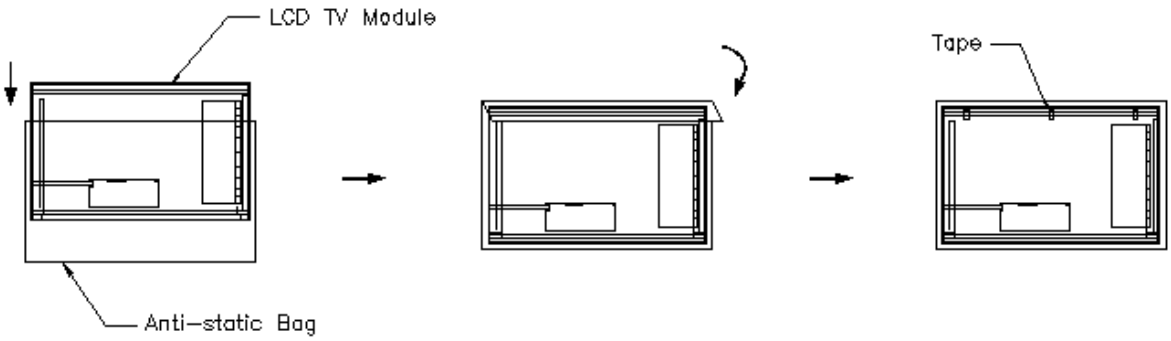

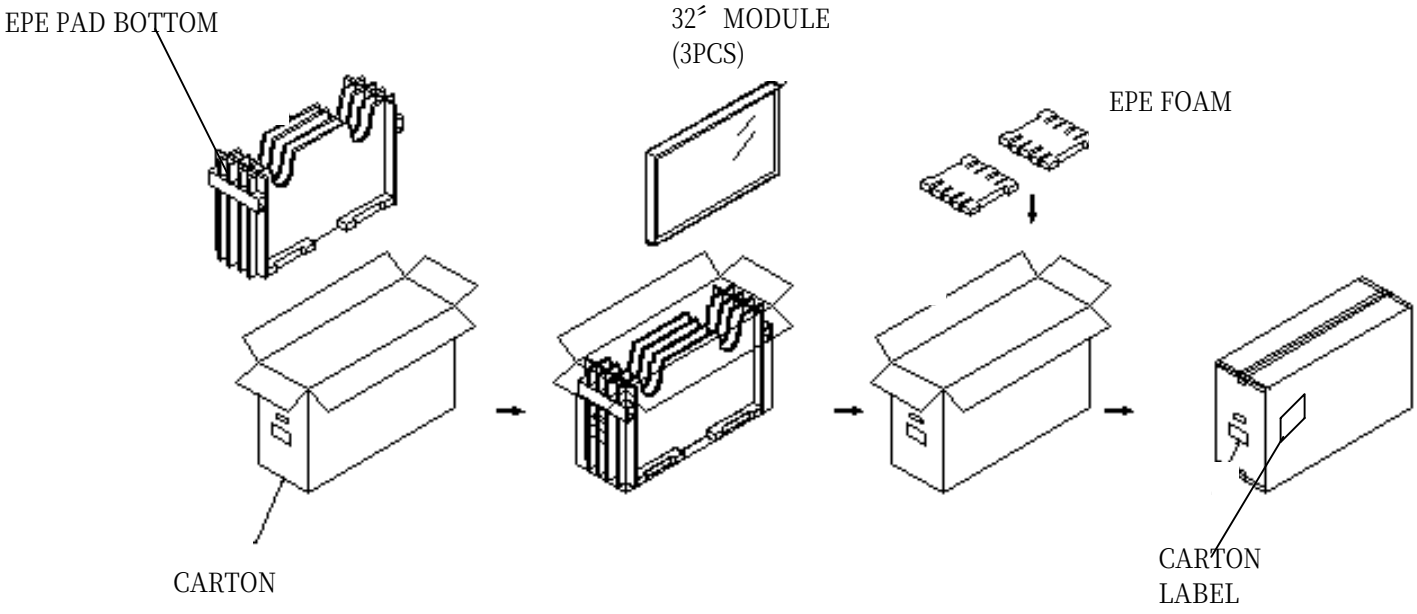

Fiqure 1 packing method

(1) Corner protector： L1125 x 50mm x 50mm

(2) Pallet：L1000 x W1150 x H130mm

(3) Bottom Cap：1000 x W1150 x H130mm

(4) Pallet Stack：1000 xW1150 x H1250mm

(5) Gross：201kg

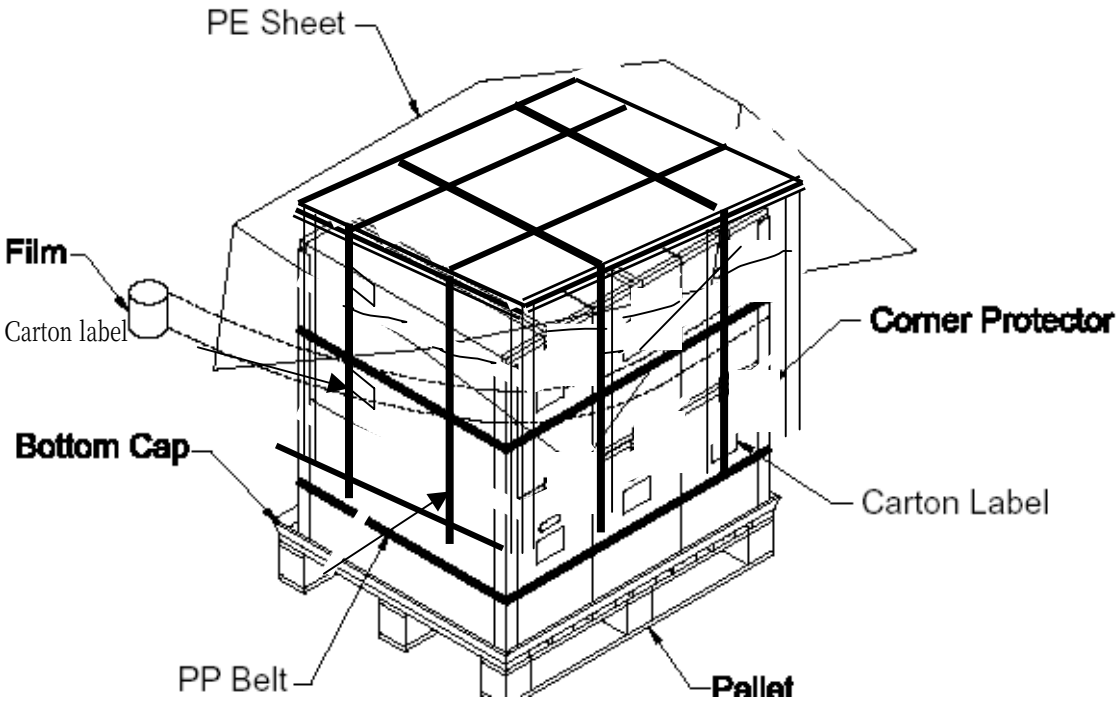

Fiqure2 packing method

11. DEFINITION OF LABELS

11.1 CPT Module Label

The barcode nameplate is pasted on each module as illustration, and its definitions are as following explanation.

(a) LABEL：

- Model Name：CLAA320WA01
- Panel ID：XXXXXXXX XXX

CPT Internal Use.

- Product date：X XX XXXX X XXX

Customer NO.

Product Line.

Serial NO.

Week.

Year.

(b) MODULE LABEL :

(c) B/L MAKER LABEL :

(d) Disposal label

11.2. Handling precaution

(1) Don't disassemble and reassemble the module by self.

(2) Acid, alkali, alcohol or touched directly by hand will damage the display.

(3) Static electricity will damage the module. Please configure grounding device.

(4) The strong vibration, shock, twist or bend will cause material damage, even module broken.

(5) It is easy to cause image sticking while displaying the same pattern for very long time.

(6) The response time, brightness and performance will vary from different temperature.

(7) The inverter will cause high temperature and high voltage, be careful please.

12. HANDLING PRECAUTIONS FOR TFT-LCD MODULE

Please pay attention to the followings in handling- TFT-LCD products；

12.1 ASSEMBLY PRECAUTION

(1) Please use the mounting hole on the module side in installing and do not beading or wrenching LCD in assembling. And please do not drop, bend or twist LCD module in handling.

(2) Please design display housing in accordance with the following guidelines.

- Housing case must be destined carefully so as not to put stresses on LCD all sides and not to wrench module. The stresses may cause non-uniformity even if there is no non-uniformity statically.
- Keep sufficient clearance between LCD module back surface and housing when the LCD module is mounted. Approximately 1.0 mm of the clearance in the design is recommended taking into account the tolerance of LCD module thickness and mounting structure height on the housing.
- When some parts, such as, FPC cable and ferrite plate, are installed underneath the LCD module, still sufficient clearance is required, such as 0.5mm. This clearance is, especially, to be reconsidered when the additional parts are implemented for EMI countermeasure.
- Design the inverter location and connector position carefully so as not to give stress to lamp cable, or not to interface the LCD module by the lamp cable.
- Keep sufficient clearance between LCD module and the others parts, such as inverter and speaker so as not to interface the LCD module. Approximately 1.0mm of the clearance in the design is recommended.

(3) Please do not push or scratch LCD panel surface with any-thing hard. And do not soil LCD panel surface by touching with bare hands. (Polarizer film, surface of LCD panel is easy to be flawed.)

(4) Please do not press any parts on the rear side such as source TCP, gate TCP, control circuit board and FPCs during handling LCD module. If pressing rear part is unavoidable, handle the LCD module with care not to damage them.

(5) Please wipe out LCD panel surface with absorbent cotton or soft clothe in case of it being soiled.

(6) Please wipe out drops of adhesives like saliva and water on LCD panel surface immediately. They might damage to cause panel surface variation and color change.

(7) Please do not take a LCD module to pieces and reconstruct it. Resolving and reconstructing modules may cause them not to work well.

(8) Please do not touch metal frames with bare hands and soiled gloves. A color change of the metal

frames can happen during a long preservation of soiled LCD modules.

(9) Please pay attention to handling lead wire of backlight so that it is not tugged in connecting with inverter.

12.2 OPERATING PRECAUTIONS

(1) Please be sure to turn off the power supply before connecting and disconnecting signal input cable.

(2) Please do not change variable resistance settings in LCD module. They are adjusted to the most suitable value. If they are changed, it might happen LCD does not satisfy the characteristics specification.

(3)Please consider that LCD backlight takes longer time to become stable of radiation characteristics in low temperature than in room temperature.

(4)A condensation might happen on the surface and inside of LCD module in case of sudden change of ambient temperature.

(5)Please pay attention to displaying the same pattern for very long time. Image might stick on LCD. If then, time going on can make LCD work well.

(6)Please obey the same caution descriptions as ones that need to pay attention to ordinary electronic parts.

12.3 PRECAUTIONS WITH ELECTROSTATICS

(1) This LCD module use CMOS-IC on circuit board and TFT-LCD panel, and so it is easy to be affected by electrostatics. Please be careful with electrostatics by the way of your body connecting to the ground and so on.

(2) Please remove protection film very slowly on the surface of LCD module to prevent from electrostatics occurrence.

12.4 STORAGE PRECAUTIONS

(1) When you store LCDs for a long time, it is recommended to keep the temperature between 0℃ ~40℃ without the exposure of sunlight and to keep the humidity less than 90%RH.

(2) Please do not leave the LCDs in the environment of high humidity and high temperature such as 60℃ 90%RH.

(3) Please do not leave the LCDs in the environment of low temperature; below -20℃.

12.5 SAFETY PRECAUTIONS

(1) When you waste LCDs, it is recommended to crush damaged or unnecessary LCDs into pieces and wash them off with solvents such as acetone and ethanol, which should later be burned.

(2) If any liquid leaks out of a damaged-glass cell and comes in contact with the hands, wash off throughly with soap and water.

12.6 OTHERS

(1) A strong incident light into LCD panel might cause display characteristics' changing inferior because of polarizer film, color filter, and other materials becoming inferior. Please do not expose LCD module direct sunlight Land strong UV rays.

(2) Please pay attention to a panel side of LCD module not to contact with other materials in preserving it alone.

(3) For the packaging box, please pay attention to the followings:

- Packaging box and inner case for LCD are designed to protect the LCDs from the damage or scratching during transportation. Please do not open except picking LCDs up from the box.
- Please do not pile them up more than 3 boxes. (They are not designed so.) And please do not turn over.
- Please handle packaging box with care not to give them sudden shock and vibrations. And also please do not throw them up.
- Packing box and inner case for LCDs are made of cardboard. So please pay attention not to get them wet. (Such like keeping them in high humidity or wet place can occur getting them wet.)

NOTE : THIS RELEASED DRAWING WAS PRODUCED BY COMPUTER , DO NOT UPDATE MASTER MANUALLY

DWG. REV.	ZONE	DESCRIPTION	DATE	REVISOR

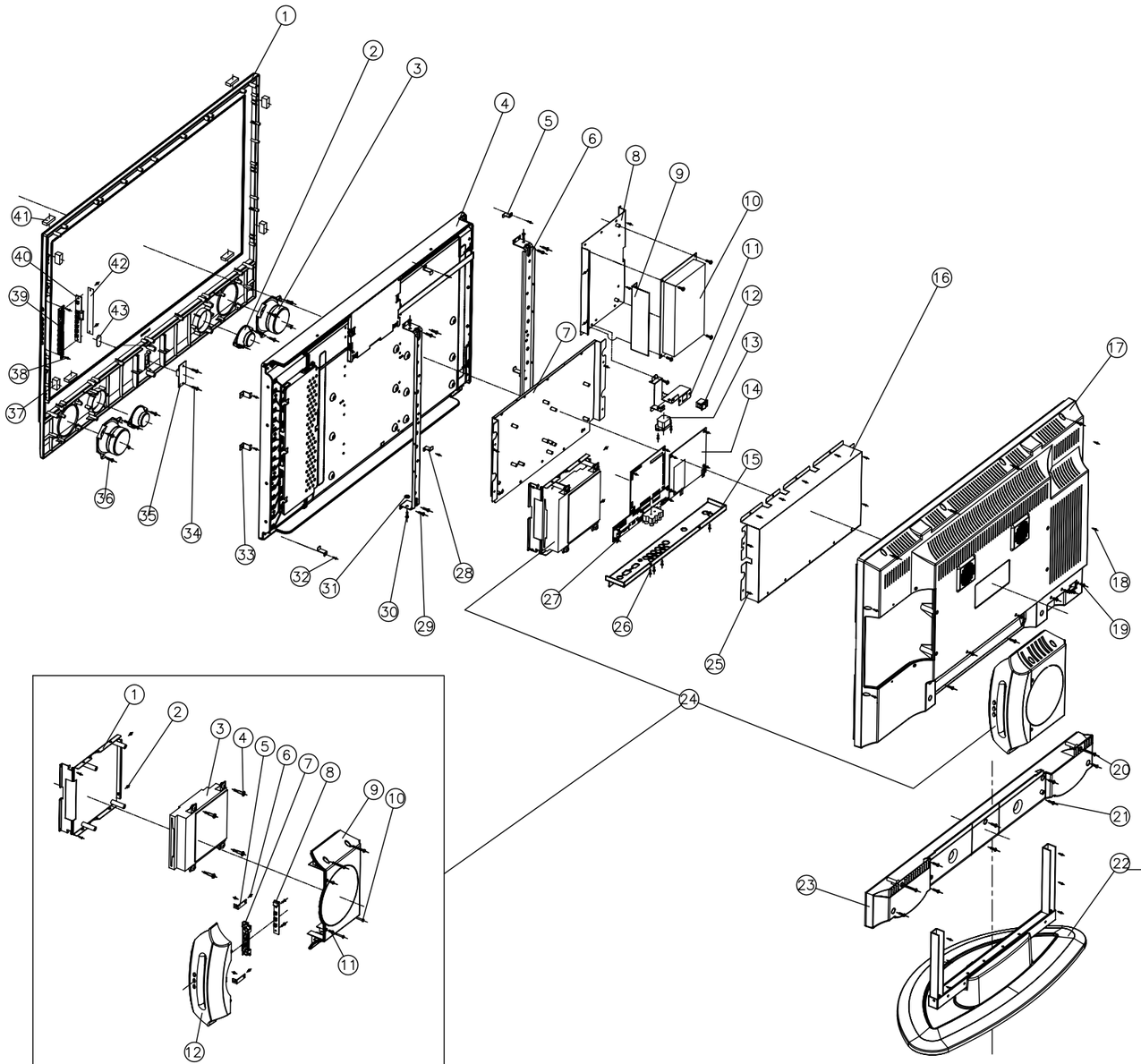

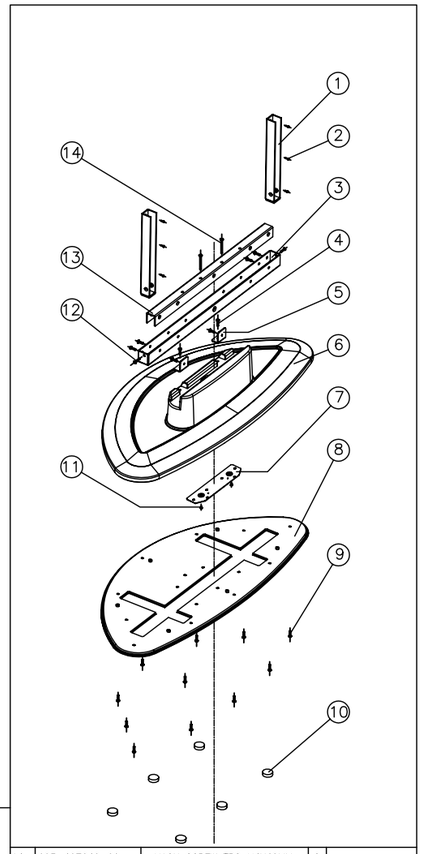

14	603-407040-00	MACH SCREW TRS M4X40MM	2	
13	429-L32AB06-01	U TOP CROSSBEAM	1	SECC T=2
12	602-407008-00	MACH.SCREW WASHER 4X8	12	
11	614-300108-00	S-TAP. SCREW 3X8	2	
10	370-42D101-01	RUBBER FOOT	6	RUBBER
9	610-350210-10	S-TAP.SCREW 3.5X10	11	
8	429-L32AB01-01	BASE SHEET	1	SECC T=1.0
7	429-L32AB09-01	MIDDLE PLATE	1	SECC T=1.0
6	231-L32AB11-01R	BASE COVER	1	HIPS
5	429-L32AB03-01	L SHEET	2	SECC T=2
4	604-407012-00	MACH.SCREW M4X12	2	
3	429-L32AB05-01	U BOTTOM CROSSBEAM	1	SECC T=2
2	604-407016-00	MACH.SCREW M4X16	4	
1	429-L32AD03-011	SECURE LEG	1	SECC T=2.0
ITM	PART NO.	DESCRIPTION	QTY	MATERIAL

12	258-L32AD01-01RV	DVD KEY PANEL	1	HIPS
11	611-300108-00	S-TAP.SCREW FLAT M3X8	2	
10	614-300125-00	S-TAP.SCREW BIND M3X25	4	
9	236-L32AD01-01RV	DVD COVER	1	HIPS
8	E7802-005006-1	PCB ASSY DVD BOARD	1	
7	277-L32AD12-01S	DVD FUNCTION KEY	1	ABS
6	614-300108-10	S-TAP SCREW BID 3.0X8	6	
5	429-L32AD09-01	"L" BKT FRO DVD COVER	2	SECC T=1.0
4	609-L32AD01-01	SPECIAL MACH SCREW M4X15	4	
3	E7802-005006-1	PCB ASSY DVD BOARD	1	
2	600-305004-00	MACH SCREW PAN M3X4	2	
1	481-L32AD03-01S	DVD SHIELDING BOTTOM	1	SECC T=1.0
ITM	PART NO.	DESCRIPTION	QTY	MATERIAL

43	269-42SD01-01L	REMOTE RECEIVE LENS	1	PMMA
42	384-L32AD03-01H	PVC SHEET FOR KEY	1	PVC
41	379-L32SD02-01Y	RUBBER CUSHION-B	4	RUBBER
40	771-L32AD01-01	FUNCTION KEY PCB ASSY	1	
39	277-L32AD01-00S	FUNCTION KEY	1	ABS
38	614-220206-10	S-TAP. SCREW BID 2.2X6	2	
37	379-L32SD01-01Y	RUBBER CUSHION-A	4	RUBBER
36	612-300110-10	S-TAP.SCREW WHR 3X10	12	
35	771-L32AD01-01	REMOTE PCB	1	
34	614-260208-10	S-TAP.SCREW BID 2.6X8	4	
33	429-L32SD03-01	Z BKT FOR PANEL-A	2	SECC T=1.0
32	614-300108-10	S-TAP SCREW BID 3.0X8	15	
31	530-100053-15	FIBBER WASHER	4	
30	604-407008-10	TAPTITE SCREW 4X8 BS	4	
29	614-400110-10	SELF TAPPING SCREW	8	
28	429-L32SD05-01	Z BKT FOR PANEL-C	2	SECC T=1.0
27	604-305008-10	MACH.SCREW BID 3X8	15	
26	614-300108-10	S-TAP SCREW BID 3.0X8	16	
25	604-305005-10	MACH.SCREW BID 3X8	14	
24	774-L32AD02-04	DVD ASSY FOR LCT3201TD	1	
23	206-L32AD01-00R	SPEAKER CABINET BACK	1	HIPS
22	734-L32AD03-01	BASE ASSY	1	
21	614-400416-00	S-TAP.SCREW BID 4X16	14	
20	614-400445-00	S-TAP SCREW BID M4X45	2	
19	601-305008-00	MACH.SCREW CTS 3X8	10	
18	610-300115-00	S-TAP SCREW ROUND3X15	4	
17	202-L32AD01-00A	BACK CABINET	1	HIPS
16	483-L32AB12-01S	SHIELD COVER(VSC)	1	SPTE T=0.3
15	436-L32AD04-01S	TERMINAL SHEET	1	SECD T=0.8
14	771EL32AD02-01	MAIN PCB ASSY	1	
13	E3219-002003	FILTER	1	
12	E4101-027001	SWITCH	1	
11	429-L32AD01-01S	POWER JACK SUPPORT	1	SECC T=0.8
10	E7802-005008	POWER ASSY	1	
9	384-L32AD02-01H	PVC SHEET FOR POWER	1	PVC
8	481-L32AD01-01S	POWER SHIELDING BOTTOM	1	SECC T=0.8
7	481-L32AB04-01S	SHIELDING BOX(VSC)	1	SECC T=0.8
6	420-L32AD02-01S	MINA SUPORT	2	SECC T=1.5
5	429-L32SD04-01	Z BKT FOR PANEL B	4	SECC T=1.0
4	E6203-32TD01	PANEL ASSY-CPT	1	
3	E4801-124001	BOURDON SPEAKER	2	
2	E4802-014001	ALT SPEAKER	2	
1	200-L32AD02-00A	FRONT CABINET	1	HIPS
ITM	PART NO.	DESCRIPTION	QTY	MATERIAL

DRAWN.	LCQ					
CHECKED						
APPRD.						
3rd ANGLE PROJECTION						

TOLERENCE UNLESS OTHERWISE SPECIFIED

0:	±0.30
0.0	±0.10
0.00:	±0.05
ANGULAR:	±0.3°
UNIT :	mm

KAWA ELECTRONIC R & D CENTRE

MATL.

FINISH

TITLE LC32HAD-EXP-CPT

MODEL NO. LC32HAD

A3 PART NO. DWG. NO.

SCALE QTY. SHEET 1 OF 1

Spare Part List for LCT3201TD

Item	Part Number	Part Description	Usage / unit	Unit
1	E6203-32TD01	DISPLAY LCD 32"	1	piece
2	771EL32AD02-01	MAIN PCBA	1	set
3	E7802-005006-1	DVD BOARD	1	piece
4	771-L27AD02-01	TERMINAL PCBA	1	set
5	E7802-005008	POWER PCBA	1	set
6	771-L27AD01-01	KEY PCB ASSY	1	set
7	771-L32AD01-03	KEY PCB ASSY MICO DVD	1	set
8	771-L32AD01-01	REMOTE RECEIVE PCBA	1	set
9	771LL27AD02-01	TUNER & AUDIO PCBA	1	set
10	E4101-027001	POWER SWITCH	1	piece
11	E4801-124001	SPEAKER	2	piece
12	E4802-014001	TWEETER	2	piece
13	E3219-002003	POWER SOCKET	1	piece
14	E3471-000048	KEY WIRE FOR DVD	1	piece
15	E3471-000045	WIRE WS SHIELD WIRE FOR 32LCD TV+COMBO DVD SILGNAL WIRE-6	1	piece
16	E3421-925032	WIRE ASSY PH2.0-4Y/4Y L=450MM AMP24V	1	piece
17	E3461-064022	WIRE WF FLAT WIRE P2.0 9P/11P FOR 32LCD TV+COMBO DVD POWER WIRE	1	piece
18	E3461-064019	TV+COMBO FOR DVD POWER WIRE	1	piece
19	E3421-925038	WIRE ASSY TJC3-2Y L=850MM SPK-L	2	piece
20	E3421-925053	WIRE ASSY FOR TV&DVD AUDIO L/R/MUTE	1	piece
21	E3421-925054	WIRE ASSY FOR TV&DVD TUNER	1	piece
22	E3471-000044	WIRE FOR COMBO MICO KEY 13P/8P+5P	1	piece
23	E3421-925061	POWER SOCKET CABLE	1	piece
24	E3461-064018	WIRE WF FLAF WIRE FOR 32LCD TV+COMBO DVD STANDBY POWER WIRE	1	piece
25	E3461-064021	WIRE FOR COMBO DVD BOARD +SV POWER	1	piece
26	E3461-064028	WIRE INVERTER 14P/2.0+8P/2.5+12P/2.0 La=780 L6=640 CPT	1	piece
27	E3421-924009	WIRE ASSY 2P L120	2	piece
28	E3471-002002	WIRE WS SHIELD WIRE FOR 32LCD TV+COMBO DVD SIGNAL WIRE	1	piece
29	E3471-001002	WIRE WS SHIELD P1.0 0P L=220 FOR CPT	1	piece
30	E3421-229007	WIRE 3P	1	piece
31	E3404-157001	AC CORD	1	Piece
32	200-L32AD02-STD01 AV	CABINET FRONT SIL/BLK	1	Piece
33	370-42D101-01	RUBBER FOOT	6	piece
34	E7301-011002	BATTERY AA	2	Piece

Spare Part List for LCT3201TD

Item	Part Number	Part Description	Usage / unit	Unit
35	790-R00105-01	REMOTE CONTROL	1	piece
36	202-L32AD01-01AV	CABINET BACK BLACK	1	piece
37	236-L32AD01-01RV	DVD COVER GREY	1	piece
38	258-L32AD01-01RV	DVD KEY PANEL GREY	1	piece
39	231-L32AB21-01RV	BASE COVER SILVER	1	set
40	277-L32AD11-03S	FUNCTION KEY	1	piece
41	481-L32AB04-01S	SHIELD BOX (VSC)	1	piece
42	481-L32AD01-01S	SHIELD BOX FOR POWER	1	piece
43	483-L32AB12-01S	SHIELD COVER (VSC)	1	piece
44	436-L32AB04-01S	TERMINAL SHEET	1	piece
45	481-L32AD03-01S	SHIELD BOX DVD FOR AUO	1	piece
46	429-L32AD01-01S	POWER JACK BRACKET	1	piece
47	263-R00101-01L	REMOTE LENS	1	piece
48	269-42SD01-01L	REMOTE RECEIVE LENS	1	piece
49	277-L32AD02-01S	DVD FUNCTION KEY	1	piece
50	206-L32AD01-01RV	SPEAKER CABINET BACK GREY	1	piece
51	510-L32AD01-MTU02K	GIFT BOX AKAI	1	piece
52	300-L32AD04-02C	POLFOAM TOP	1	piece
53	300-L32AD05-02C	POLFOAM BOTTOM	1	piece
54	310-111404-07V	POLYBAG 11"X14"X0.04	1	piece
55	310-041204-01V	POLYBAG 4"X12"X0.04	1	piece
56	310-423850-07V	BAG LAMIFILM 42"X38"X0.5MM	1	piece
57	580-L32ADHS-TU02L	INSTRUCTION MANUAL	1	piece
58	388-42D103-01H	CAUTION LABLE	1	piece
59	388-42SB04-01H	POWER PLATE	1	piece
60	387-L32AD01-MTU02H	MODEL PLATE	1	piece
61	384-L32AD01-MTU01H	SHEET FOR TERMINAL	1	piece
62	590-L32AD01-01	WARRANTY CARD	1	piece
63	593-L32AD01-02	INSERTION CARD	1	piece
64	579-L32AD02-01	UPC LABEL OF G/B	2	piece
65	568-P46T02-02	WARNING LABEL	1	piece
66	579-L32AD04-01	LASER WARNING LABEL	1	piece
67	579-42D103-02	ON/OFF LB ENG	1	piece
68	579-42D102-09	SERIAL NO/BAR CODE LABEL	1	piece
69	579-L32AD03-02	CLASS I LASER PRODUCT LOGO	1	piece
70	579-42D105-01	PROTECTIVE EARTH LABE	1	piece

If you forget your V-Chip Password

- Omnipotence V-Chip Password: **8205**.
- Press **MENU** button.
- Press **LEFT RIGHT** buttons to highlight "MISC" Menu.
- Press **Up, Down** buttons to highlight "Parentald".
- Press **ENTER** button to pop up "Input your Password Please".
- Use the **Number buttons** (0~9) to enter an omnipotence Password.
- Press **ENTER** button to confirm and your can select "CHANGE PASSWORD".
- Suggest: Change to your familiar Password again.

Software upgrade

- Connect the RS-232C input jack to an external control device (such as a computer) and software upgrade.

Type of connector; D-Sub 9-pin male

No.	Pin name
1	No connection
2	RXD (Receive data)
3	TXD (Transmit data)
4	DTR (DTE side ready)
5	GND
6	DSR (DCE side ready)
7	RTS (Ready to send)
8	CTS (Clear to send)
9	No Connection

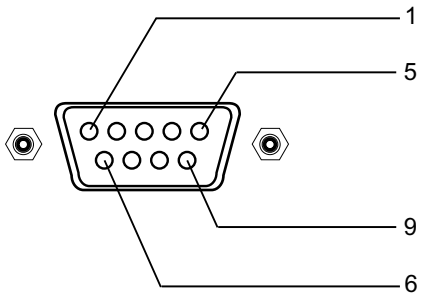

RS-232C configurations

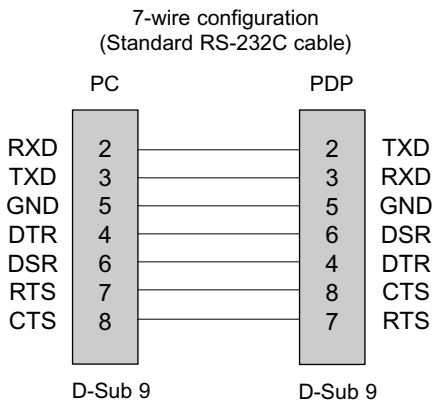

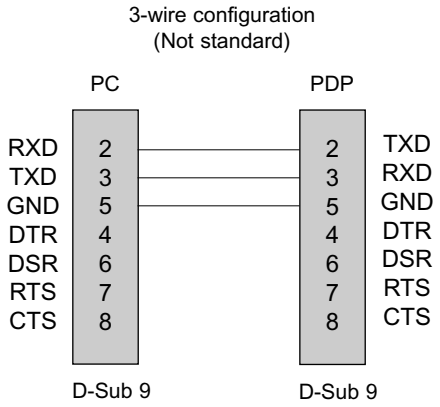

Software upgrade Process

- Power Switch OFF.
- Connect the serial port of the control device to the RS-232 jack on the LCD-TV back panel. RS-232C connection cables are not supplied with the LCD-TV.
- Power Switch ON. The power indicator on the front of the panel should now display red, means that the LCD-TV is in standby mode.
- Copy the software (MTKTOOL) to the computer.
- Open the software (MTKTOOL.EXE)
- Select MTK 8205 and Point "browse" on the interface of the MTKTOOL.exe.
- Select the file which will be update.
- Point "update" on the interface of the MTKTOOL.exe.
- Waiting for the upgrader programing, when it is finished, the bar will display 100%.
- After the upgrader is finished, shut down the power switch, take out the RS-232C connection after the power indicator is extinguished.

Note: After upgrading, the first time of power on will be some long.